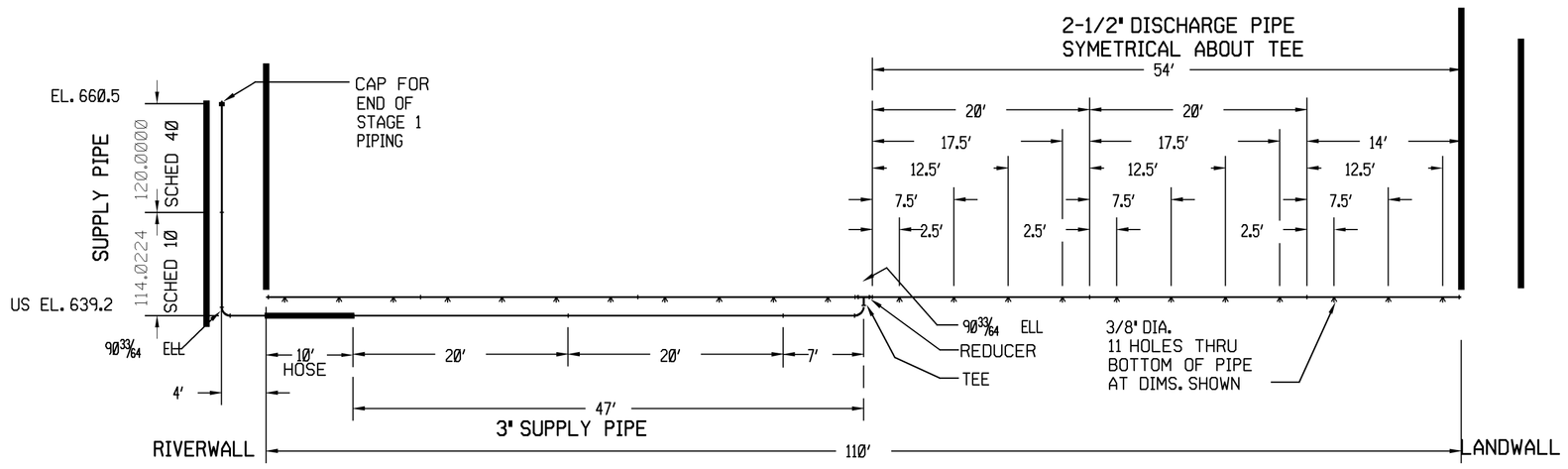

DETAIL 1
SCREEN BUBBLER ELEVATION 27/29
(TYPICAL 2 PLACES, EXCEPT AS NOTED)

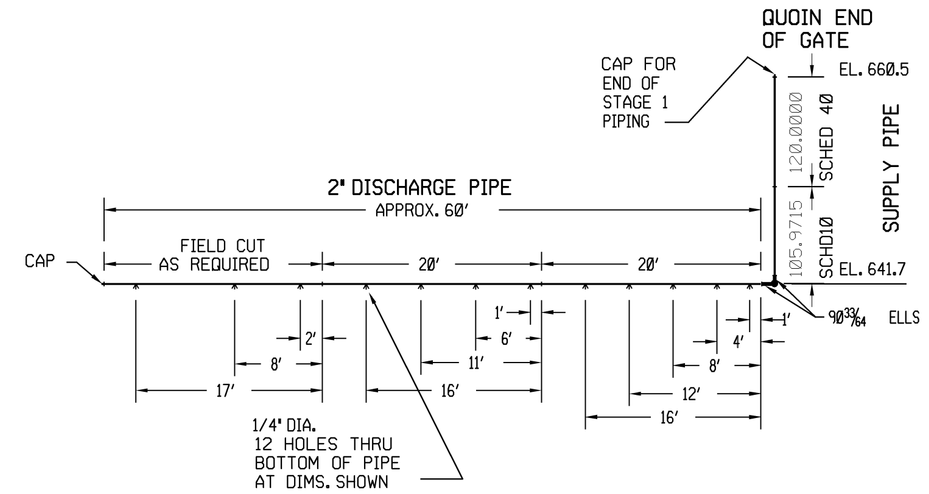

DETAIL 2
GATE BUBBLER ELEVATION 27/29
(TYPICAL 2 PLACES, EXCEPT AS NOTED)

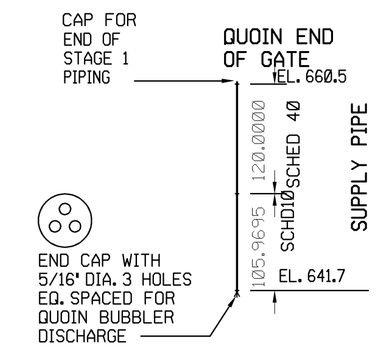

DETAIL 3
QUOIN BUBBLER ELEVATION 27/29
(TYPICAL 2 PLACES, EXCEPT AS NOTED)

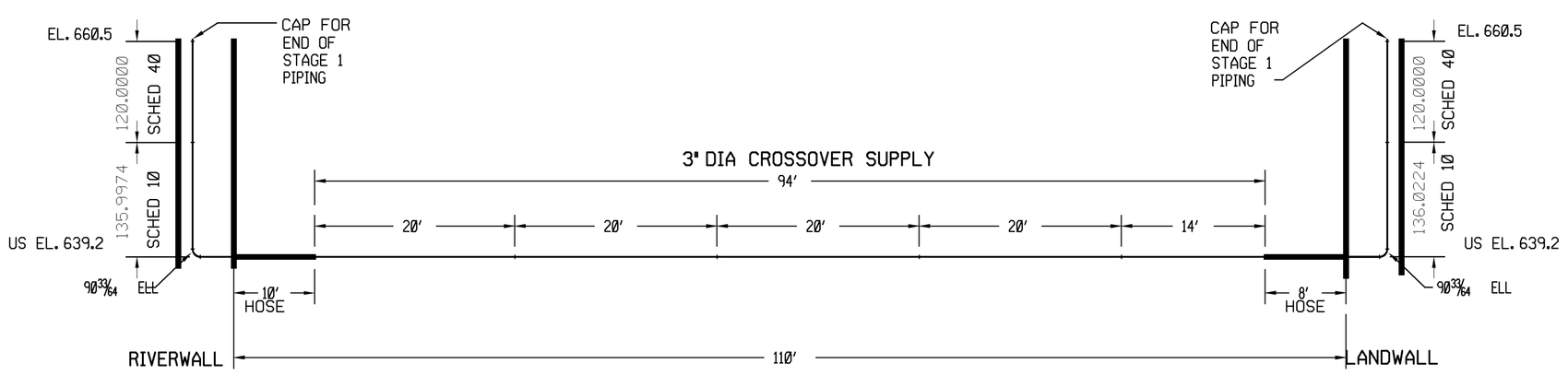

DETAIL 4
CROSSOVER PIPE ELEVATION 27/29
(TYPICAL 2 PLACES, EXCEPT AS NOTED)

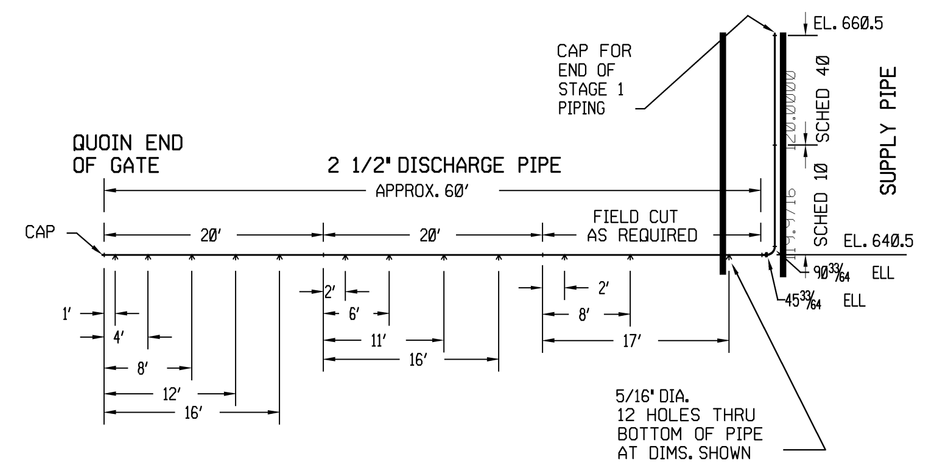

DETAIL 5
RECESS BUBBLER ELEVATION 27/29
(TYPICAL 2 PLACES, EXCEPT AS NOTED)

GENERAL NOTES:

1. PIPE - SCHED 10 & 40, 304 S.S. PIPE
2. AIR HOSE - 150 PSIG W.P., 304 S.S. FERRULES W/ GROOVED ENDS
3. FITTINGS - 304 S.S. W/ GROOVED ENDS
4. OFFSET CLAMP - 304 S.S., GRINNEL 103 OR EQUAL
5. U-BOLT - 316 S.S., SIZE FOR 2" PIPE & SPACER
6. EXPANSION ANCHORS - 316 S.S., FED SPEC FF-S-325, GROUP2, TYPE 4, CLASS 1
7. THREADED BOLTS - 3/8-16 UNC X 2 1/2" LG, 316 S.S. W/LOCK WASHERS & NUTS
8. INSTALLATION OF TOP 10' OF ALL VERTICAL PIPING AT UPPER GATE SHALL BE SCH. 40 STAINLESS STEEL. TOP 20' OF ALL VERTICAL PIPING AT LOWER GATE SHALL BE SCH. 40 STAINLESS STEEL. ALL OTHER PIPING SHALL BE SCH. 10 STAINLESS STEEL.
9. FOR PIPE MOUNTING INSTRUCTIONS SEE DETAILS 27/30.
10. PROVIDE PIPE SUPPORTS ON ALL PIPING. SPACING SHALL BE 5'-0" 35/64 TO CLEAR BUBBLER HOLES AND COUPLINGS. GENERALLY ONE SUPPORT SHALL BE LOCATED AS NEAR AS POSSIBLE TO ELBOWS, TEES AND PIPE ENDS.
11. STAGGER OFFSET CLAMPS PLACEMENT TO MAINTAIN SPECIFIED DISTANCES BETWEEN PIPES.
12. ALL PIPE, FITTINGS, SUPPORTS & EXPANSION ANCHORS SHALL BE STAINLESS STEEL.
13. SEE 27/30 FOR INSTALLATION DETAILS.
14. PIPING SHALL BE MECHANICAL GROOVED COUPLING SYSTEM FURNISHED BY THE GOVERNMENT. ALL FITTINGS SHALL BE PRE-GROOVED. PIPING SHALL BE GROOVED IN FIELD BY COE HIRED LABOR (UNLESS GROOVED BY SUPPLIER).
15. COUPLINGS SHALL BE INSTALLED ON MAX 20' CENTERLINES
16. MAINTAIN PIPE CENTERLINES + OR - 1/4"
17. MOUNT BUBBLER PIPING WITH HOLES IN BOTTOM OF PIPE AND IN TRUE PLANE PERPENDICULAR TO RUN OF PIPE

ABBREVIATIONS:
B.O.P. = BOTTOM OF PIPE
T.O.P. = TOP OF PIPE
REF. = REFERENCE DIMENSION
S.S. = STAINLESS STEEL
W.P. = WORKING PRESSURE

	PIPE					FITTINGS						HARDWARE						
SYSTEM	DIA.	SCHD 10 SS PIPE W/HOLES (NOTE 1)	SCHD 10 SS PIPE WO/HOLES (NOTE 1)	SCHD 40 SS PIPE (NOTE 1)	AIR HOSE 100 PSIG 10 FT. (NOTE 2)	SCHD 10 SS 90 33/64 ELL (NOTE 3)	SCHD 10 SS 45 33/64 ELL (NOTE 3)	SCHD 10 SS TEE (NOTE 3)	SCHD 10 SS CAP (NOTE 3)	SCHD 10 SS REDUCER (NOTE 3)	OFFSET CLAMP (NOTE 4)	U-BOLT & SPACER (NOTE 5)	EXPANSION ANCHOR (NOTE 6)					THREADED BOLTS (NOTE 7)
SCREEN BUBBLER SUPPLY	3"	NA	60'	10'	10'	2	NA	1	1	NA	20	NA	40					NA
SCREEN BUBBLER DISCHARGE	2 1/2"	108	NA	NA	NA	NA	NA	NA	2	2	20	NA	56					NA
CROSSOVER PIPE SUPPLY	3"	NA	125'	20'	18'	2	NA	NA	2	NA	36	NA	78					NA
GATE BUBBLER SUPPLY	2"	NA	24'	20'	NA	8	NA	NA	2	NA	12	NA	NA					24
GATE BUBBLER DISCHARGE	2"	120	NA	NA	NA	NA	NA	NA	2	NA	NA	30	NA					NA
RECESS BUBBLER SUPPLY	2 1/2"	NA	27'	20'	NA	2	2	NA	2	NA	12	NA	24					NA
RECESS BUBBLER DISCHARGE	2 1/2"	120	NA	NA	NA	NA	NA	NA	2	NA	20	NA	60					NA
QUOIN BUBBLER SUPPLY	2"	NA	24'	20'	NA	NA	NA	NA	4	NA	NA	12	NA					NA
TOTAL		348'	260'	90'	28'	14	2	1	17	2	120	42	258					24

BILL OF MATERIALS
UPSTREAM ONLY

SYMBOL	DESCRIPTION	DATE	APPROVAL
	AS-BUILT AS OF COMPLETION DATE	3/90	

DEPARTMENT OF THE ARMY
ST. PAUL DISTRICT, CORPS OF ENGINEERS
ST. PAUL, MINNESOTA

AE APPROVING OFFICIAL:

RIVERS & HARBORS UNIT AS-BUILT DRAWING
LOCK 5 LOCKWORK, STAGE 1
MAJOR MAINTENANCE - MISSISSIPPI RIVER
LOCK & DAM NO. 5 MINNESOTA CITY, MINNESOTA
LOCK PIPING - BUBBLER
UPSTREAM BUBBLER PIPING
BILL OF MATERIALS

ED-D: DESIGNED: TMP; CHECKED: PRK; DRAWN: GDE
ED-CH: DESIGNED: ; CHECKED:
DATE: SEPTEMBER 1989
CAD FILE NAME: MG27A031.DWG
SPEC NO: R & H UNIT
DRAWING NUMBER: M-L5-27/031
SHT 12 OF 15