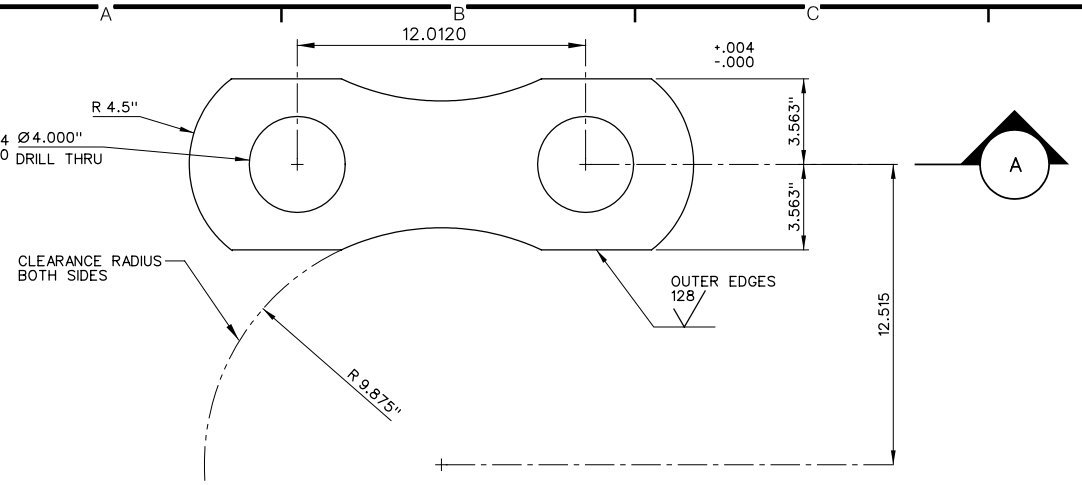

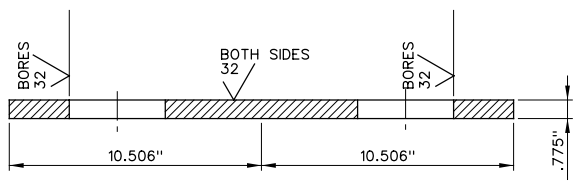

SECTION A

SIDE BAR

MK 55/9-9
MATERIAL: ASTM B505 UNS C95500 HT
SCALE: 3 " = 1'-0"

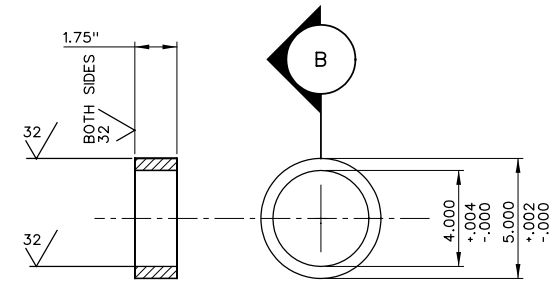

SECTION B

COLLAR (DAM AND LOCK)

MK 55/9-8
MATERIAL: ASTM B505 UNS C95500 HT
SCALE: 3" = 1'-0"

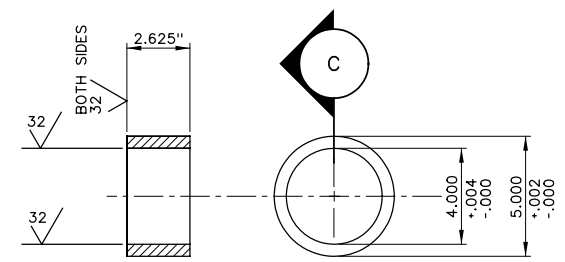

SECTION C

SPACER SLEEVE (DAM AND LOCK)

MK 55/9-2
MATERIAL: ASTM B505 UNS C95500 HT
SCALE: 3" = 1'-0"

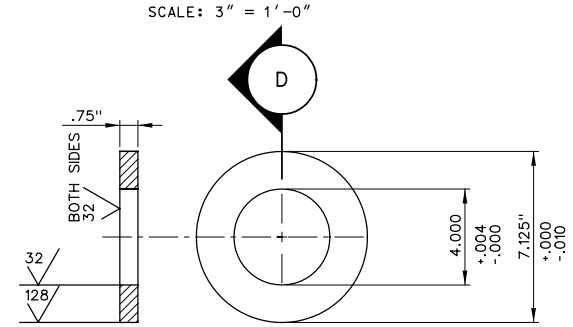

SECTION D

SPACER WASHER (DAM AND LOCK)

MK 55/9-15
MATERIAL: ASTM B505 UNS C95500 HT
SCALE: 3" = 1'-0"

NOTES:

1. TWO LIFTING CHAIN ASSEMBLIES REQUIRED PER TAINTER GATE.
2. EACH CHAIN ASSEMBLY SHALL BE ACCOMPANIED BY A BOX OF LOOSE PARTS TO INCLUDE ONE SHORT PIN, ONE INTERMEDIATE PIN, FOUR RETAINER RINGS AND TWO COLLARS. SEPARATE BOX (ES) SHALL CONTAIN THE 100 EXTRA RETAINER RINGS. END PIN, HALFWAY-SPLIT PIN (SEE ABOVE) SHIPPED LOOSE. EACH CHAIN ASSEMBLY SHIPPED WITH ONE BOX CONTAINING ALL REMAINING PARTS TO INSTALL ONE ASSEMBLY CHAIN (INCLUDING 3 PINS, 6 COTTER PINS, AND 6 COLLARS). CLEARLY LABEL BOXES TO CORRELATE TO SPECIFIC DAM SITES.

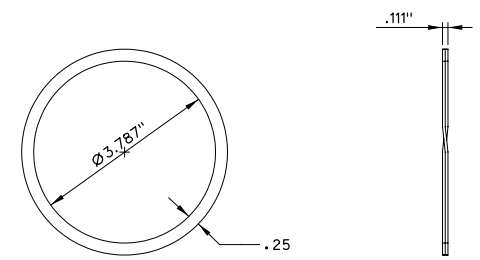

TYPICAL RETAINING RING DIMENSIONS FOR APPLICATION TO 4.00" SHAFT O.D. SEE SPECIFICATIONS.

RETAINER RINGS

MK 55/9-17
SCALE: 6" = 1'-0"

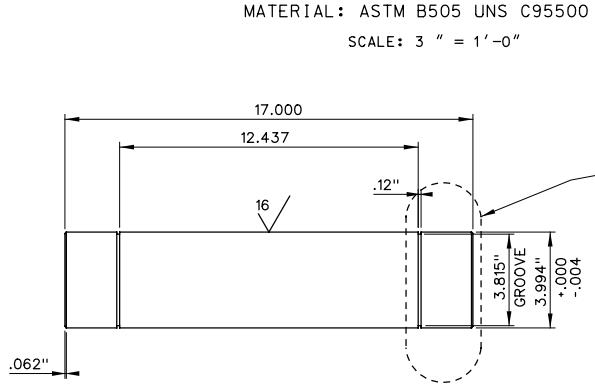

LONG PIN (LOCK AND DAM)

MK 55/9-1
MATERIAL: S/S ASTM A564 TYPE XM-25 CONDITION H1050
SCALE: 3" = 1'-0"

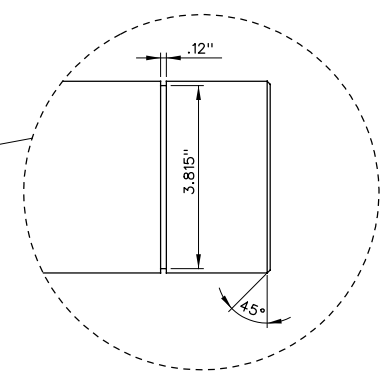

NOTE:
ALL DIMENSIONS (+/-) 0.015 INCH TOLERANCE EXCEPT AS NOTED OTHERWISE.

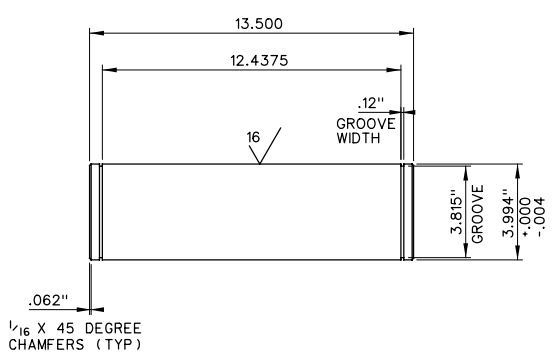

NORMAL PIN (LOCK AND DAM)

MK 55/9-5
MATERIAL: S/S ASTM A564 TYPE XM-25 CONDITION H1050
SCALE: 3" = 1'-0"

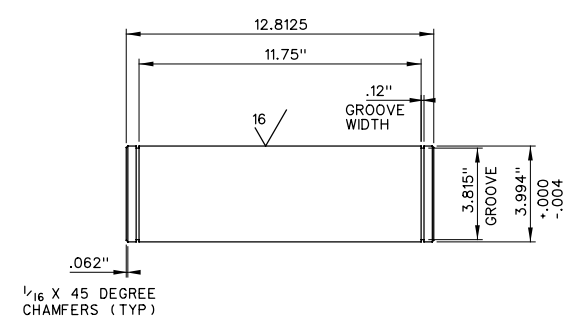

NORMAL PIN (DAM)

MK 55/9-6
MATERIAL: S/S ASTM A564 TYPE XM-25 CONDITION H1050
SCALE: 3" = 1'-0"

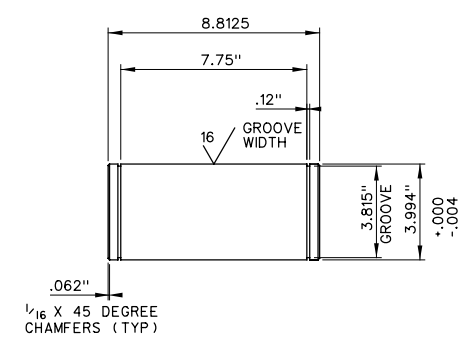

NORMAL PIN (LOCK)

MK 55/9-7
MATERIAL: S/S ASTM A564 TYPE XM-25 CONDITION H1050
SCALE: 3" = 1'-0"

1" 0 2" 4"
SCALE: 6" = 1'-0"

1" 0 4" 8"
SCALE: 3" = 1'-0"

US Army Corps of Engineers
St. Paul District

Symbol	Description	Date	Appr.

DESIGNED: MSK | SCALE: | DATE: JUL/2004
CHECKED: MSK | CADD FILE NAME: MBPM55030.DGN
DRAWN: F.JB | SOLICITATION NO.: W912ES-04-Q-0020
DESIGNED: | APPROVING OFFICIAL:
CHECKED:

DEPARTMENT OF THE ARMY
ST. PAUL, MINNESOTA
CORPS OF ENGINEERS
ST. PAUL DISTRICT

CONSTRUCTION DRAWING
LSAF - CHAIN SUPPLY CONTRACT
TAINTER GATE OPERATING MACH.
TAINTER GATE CHAIN
SECTION - DETAILS

DRAWING NUMBER:
M-LG-55/030
SHT 4 OF 4