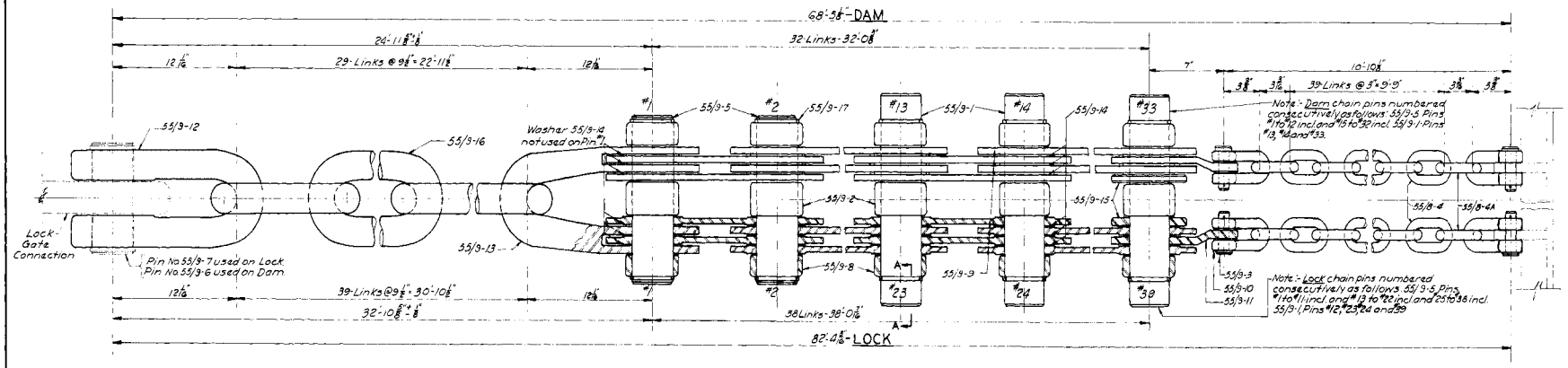

ASSEMBLY OF CHAINS

SCALE: 3" = 1'-0"

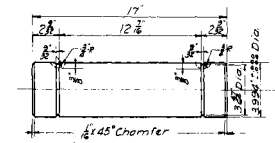

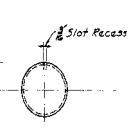

* finish ⅛" all over
Heat treat & Harden 223-248 Brinell

LONG PIN

FORGED STEEL F.S. 1045 MARK 55/9-1
MAKE- 8 LOCK - 6 DAM WT. 59 LB.
SCALE: 3" = 1'-0"

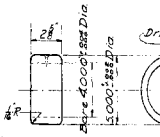

* finish ⅛" all over Heat treat & Harden 200-250 Brinell

SPACER SLEEVE

SEAMLESS ST. TUBING 0.50-0.60 CARBON MARK 55/9-2
MAKE- 7 LOCK - 8 DAM WT. 5.2 LB
SCALE: 3" = 1'-0"

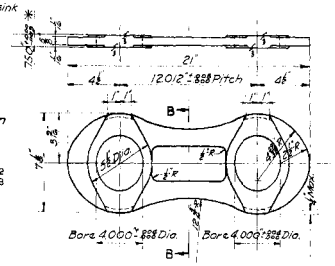

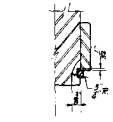

Side bars having imperfectly raised faces but which when finished conform to Plans and Specifications in all other respects may be accepted providing the edges of the raised face at no point exceed ⅛" from the side edges of the bar.

SIDE BAR

FORGED STEEL F.S. 1045 MARK 55/9-9
MAKE- 304 LOCK 256 DAM WT. 17 LB
SCALE: 3" = 1'-0"

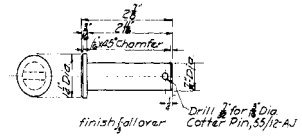

PIN

COLD ROLLED STEEL MARK 55/9-3
MAKE- 8 LOCK - 8 DAM WT. 0.5 LB.
SCALE: 6" = 1'-0"

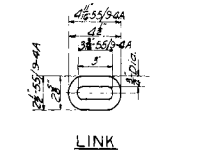

LINK

FORGED STEEL
MARK 55/9-4 MAKE- 7 BLOCK 78 DAM WT. 2 LB.
MARK 55/9-4A MAKE- 8 LOCK - 8 DAM WT. 2.2 LB.
SCALE: 3" = 1'-0"

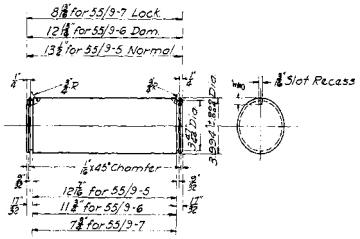

Heat treat & Harden 223-248 Brinell

* finish ⅛" all over

NORMAL PIN

FORGED STEEL F.S. 1045
MARK 55/9-5 MAKE- 70 LOCK 600 AM WT. 48 LB.
MARK 55/9-6 MAKE- 2 DAM WT. 45.5 LB.
MARK 55/9-7 MAKE- 2 LOCK WT. 31.2 LB.
SCALE 3" = 1'-0"

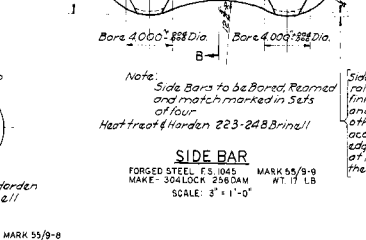

* finish ⅛" all over Heat treat & Harden 200-250 Brinell

COLLAR

SEAMLESS ST. TUBING 0.50-0.60 CARBON MARK 55/9-8
MAKE- 156 LOCK - 132 DAM WT. 3.5 LB.
SCALE: 3" = 1'-0"

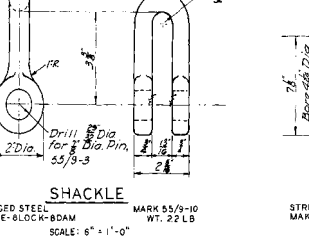

SHACKLE

FORGED STEEL MARK 55/9-10
MAKE- 8 LOCK - 8 DAM WT. 22 LB
SCALE: 6" = 1'-0"

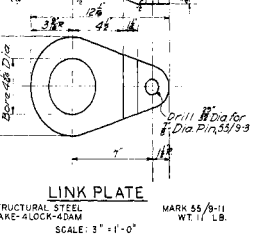

LINK PLATE

STRUCTURAL STEEL MARK 55/9-11
MAKE- 4 LOCK - 4 DAM WT. 1.1 LB.
SCALE: 3" = 1'-0"

General Notes:
Unless otherwise shown or noted
Machining tolerance for fractional dimension to be ±1/64"
Machining tolerance for decimal dimension to be as shown
Each part to have a piece mark.

Catalog references indicate examples of a standard product
Other manufacturers approved products may be substituted

Quantities shown are for One Lock or One Dam Tainter Gate Machine.

Finish classification 1/4 = Rough Finish, 1/2 = Average Finish, 3/4 = Smooth Finish, 1/1 = Fine Finish, see Specifications

* Grinding may be required if necessary, in order to maintain tolerances shown.

For General Arrangements, see — — — — — — — 55/1 & 55/2
For Chain Rack and Guard, see — — — — — — — 55/10
For Parts List, see — — — — — — — 55/12

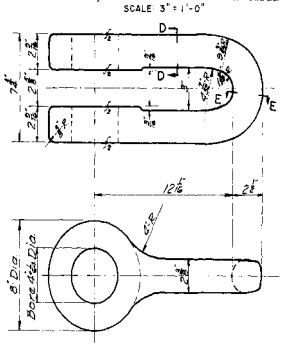

GATE SHACKLE

CHAIN STEEL MARK 55/9-12
MAKE- 2 LOCK - 2 DAM WT. 8.5 LB
SCALE: 3" = 1'-0"

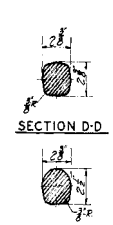

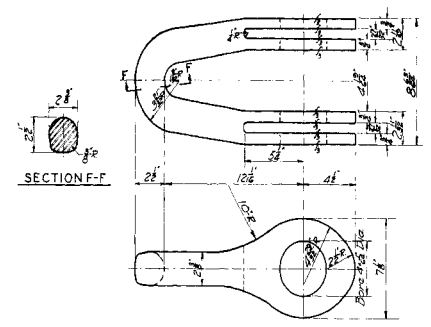

CHAIN SHACKLE

CHAIN STEEL MARK 55/9-13
MAKE- 2 LOCK - 2 DAM WT. 56 LB
SCALE: 3" = 1'-0"

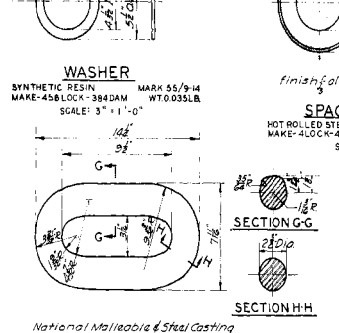

WASHER

SYNTHETIC RESIN MARK 55/9-14
MAKE- 45 LOCK - 384 DAM WT. 0.035 LB.
SCALE: 3" = 1'-0"

National Malleable & Steel Casting Co. Marine Railway Chain Cable.

LINK

CHAIN STEEL MARK 55/9-16
MAKE- 78 LOCK - 58 DAM WT. 36.6 LB.
SCALE: 3" = 1'-0"

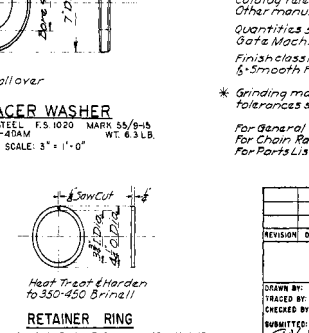

SPACER WASHER

HOT ROLLED STEEL F.S. 1020 MARK 55/9-15
MAKE- 4 LOCK - 40 AM WT. 6.3 LB.
SCALE: 3" = 1'-0"

RETAINER RING

CORROSION RESISTING STEEL MARK 55/9-17
MAKE- 160 LOCK 136 DAM WT. 0.22 LB
SCALE: 3" = 1'-0"

Note:
Main Lock - Payment Item No. 82 1-Each, Tainter Gate Machine
Auxiliary Lock - Payment Item No. 83 1-Each, Tainter Gate Machine.
Dam - Payment Item No. 84 3-Each, Tainter Gate Machine.

REVISION	DATE	DESCRIPTION	BY
		AS BUILT AS OF NOV. 1956	M.J.S.

DEPARTMENT OF THE ARMY
CORPS OF ENGINEERS
OFFICE OF THE DISTRICT ENGINEER
ST. PAUL, MINNESOTA

DRAWN BY: H. W.S.
TRACED BY:
CHECKED BY: G.L.T.
SUBMITTED: CHIEF, MECH. SEC. U.W.D.
RECOMMENDED: CHIEF, ENGR. U.W.D.
APPROVED: COL., CORPS OF ENGINEERS DISTRICT ENGINEER ST. PAUL DISTRICT
DATE: MARCH 1950

MISSISSIPPI RIVER
ST. ANTHONY FALLS
LOWER LOCK & DAM
LOCK & DAM
TAINTER GATE OPERATING MACHINERY
LIFTING CHAIN & CONNECTIONS
SCALE: AS SHOWN

DRAWING No. M-L STA-55/9
AS BUILT