NOTES:

1. UNLESS OTHERWISE NOTED, UNITS SHOWN ARE IN MILLIMETERS.
2. ALL ELEVATIONS ARE IN METERS.
3. EXISTING MANHOLE, RISER AND BASE SLAB ARE PRECAST REINFORCED CONCRETE. ACTUAL PLAN DIMENSIONS OF GAGE WELL ARE: OUTSIDE 6'-0"X6'-0" AND 5'-0"X5'-0" INSIDE. GAGEWELL MAY REQUIRE DEWATERING.
4. EXISTING TEMPORARY PLYWOOD TOP SHALL BE REMOVED AND DISPOSED OF. AT NO TIME SHALL THE GAGEWELL BE LEFT OPEN EXCEPT WHEN WORK IS IN PROGESS.

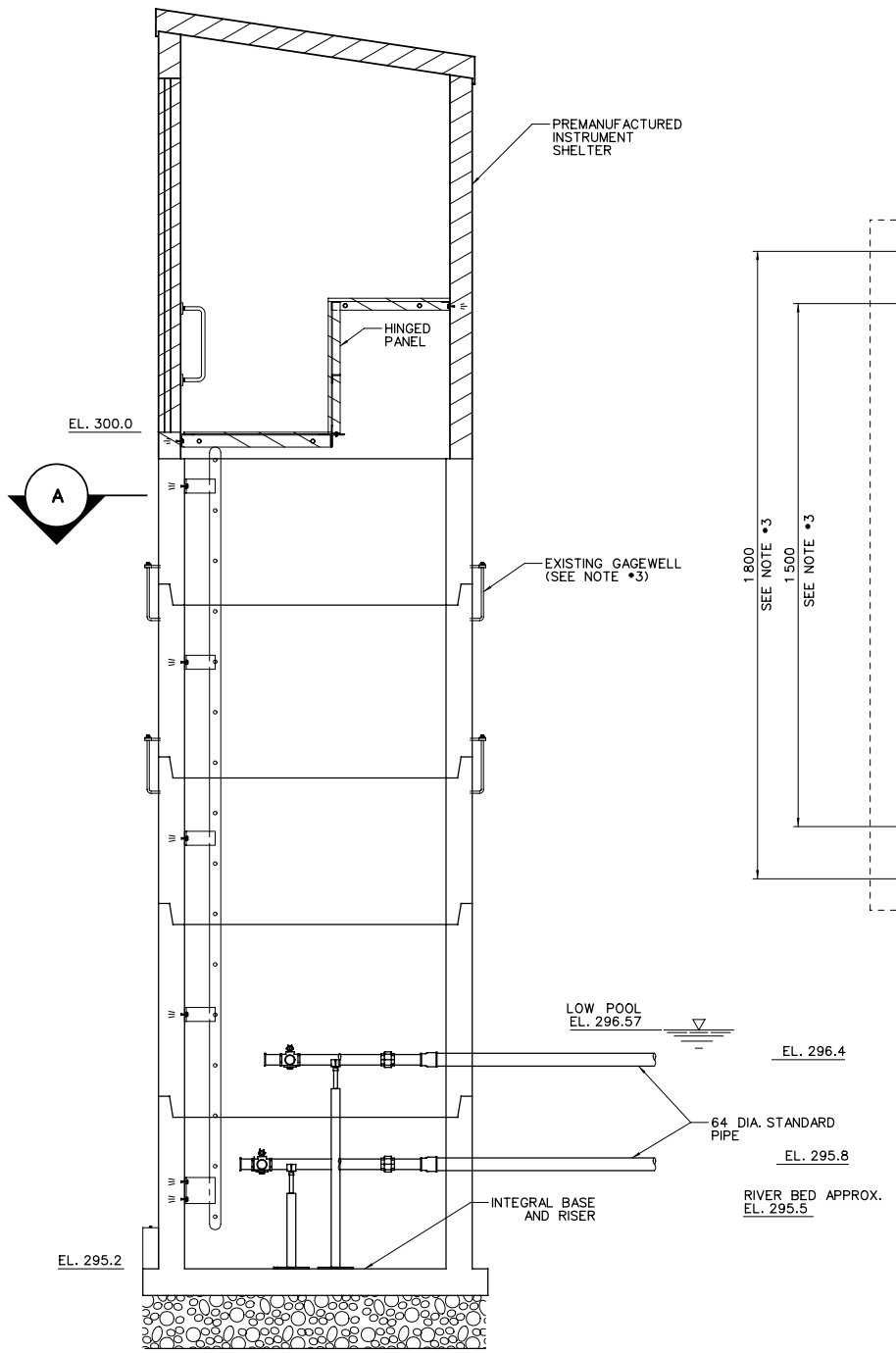

ELEVATION
GAGE WELL AND INSTRUMENT SHELTER
SCALE: 1:20

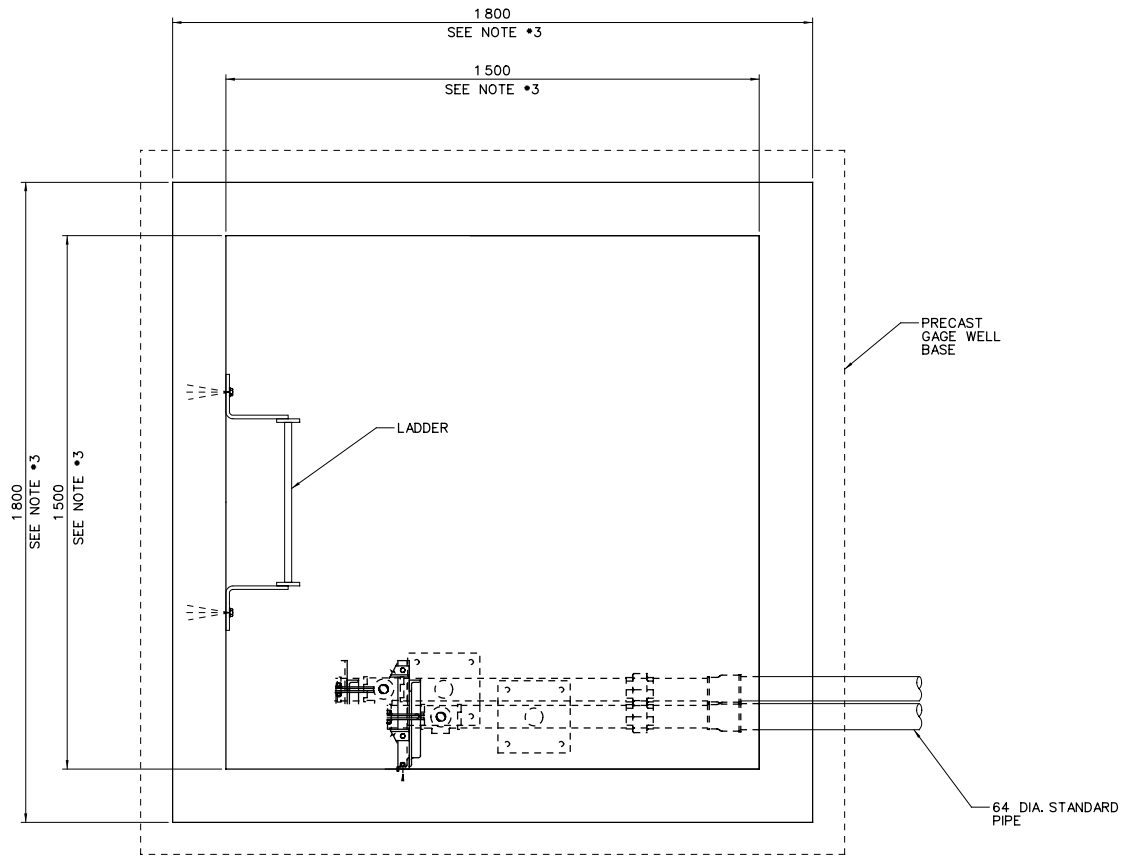

SECTION
BELOW EL. 300.0 — A
SCALE: 1:10

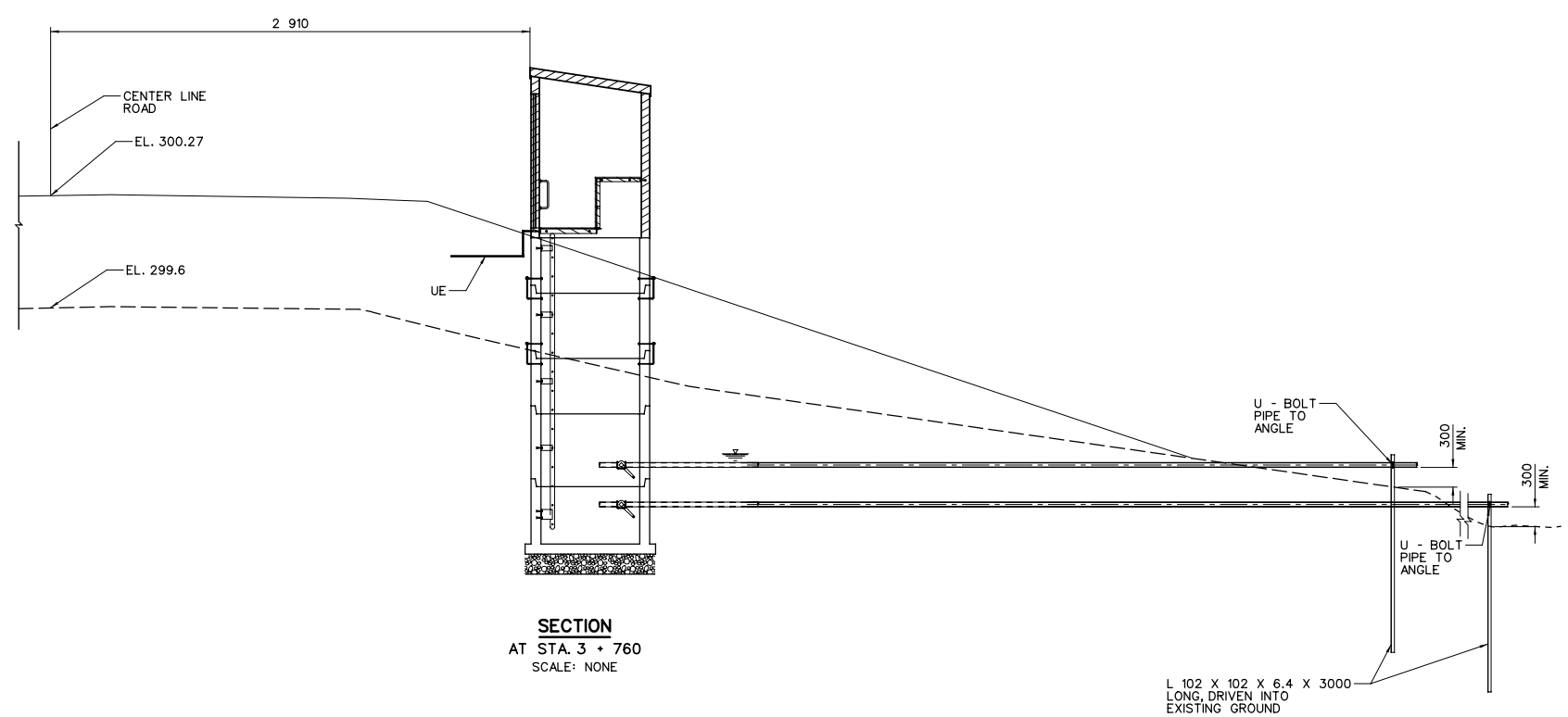

SECTION
AT STA. 3 + 760
SCALE: NONE

US Army Corps of Engineers
St. Paul District

Symbol	Description	Date	Appr.

DESIGNED: ED-D
CHECKED:
DRAWN:
DESIGNED: ED-H
CHECKED:

SCALE: AS SHOWN
DATE: APRIL 1999
CADD FILE NAME: MNMANHOL.DGN
SOL. NO: DACW37-98-B-0017
AE APPROVING OFFICIAL:

DEPARTMENT OF THE ARMY
ST. PAUL MINNESOTA
CORPS OF ENGINEERS
ST. PAUL DISTRICT

RESERVATION HIGHWAY
NEW CONTROL STRUCTURE
FLOOD CONTROL
GAGE WELL
ELEVATION, AND SECTIONS

DRAWING NUMBER:
R30-P-

SHT OF 35

CONTRACT NO. DACW37-00-C-0002