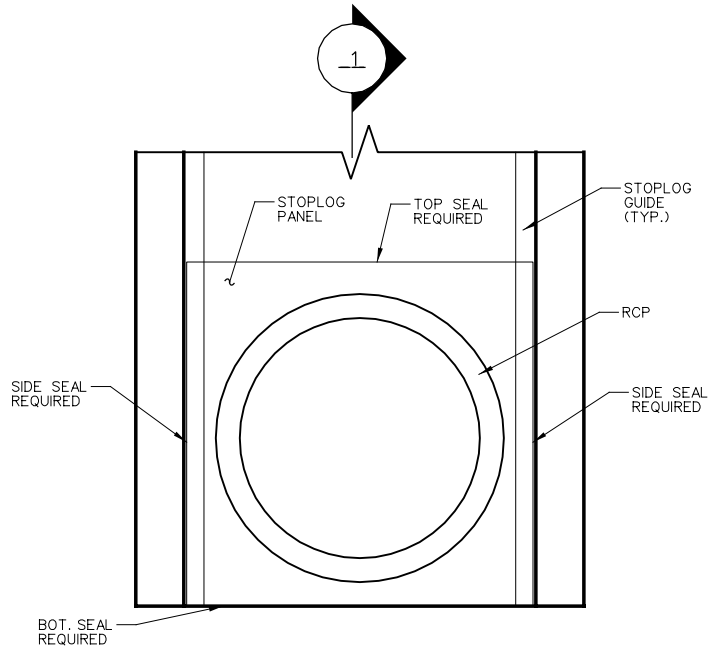

PLAN

STOPLOG PANEL

SCALE: NONE

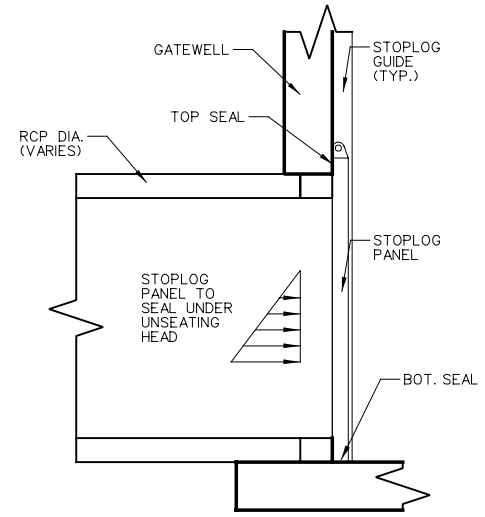

SECTION 1

STOPLOG PANEL

SCALE: NONE

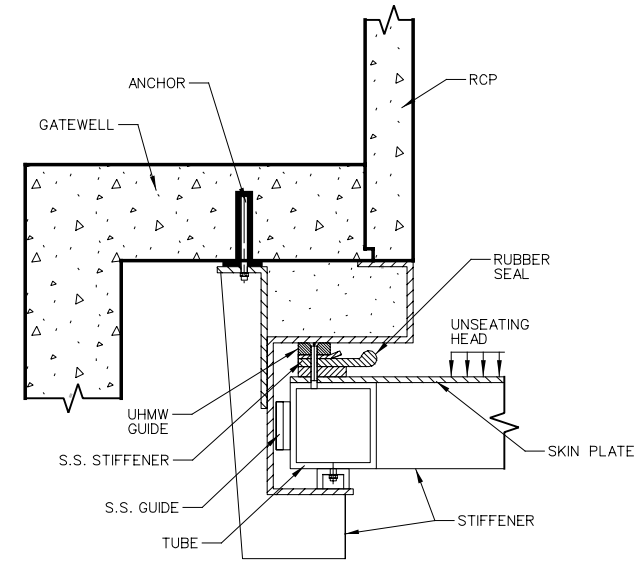

DETAIL A

TYPICAL STOPLOG PANEL SEAL 64/1223 64/1225

SCALE: NONE

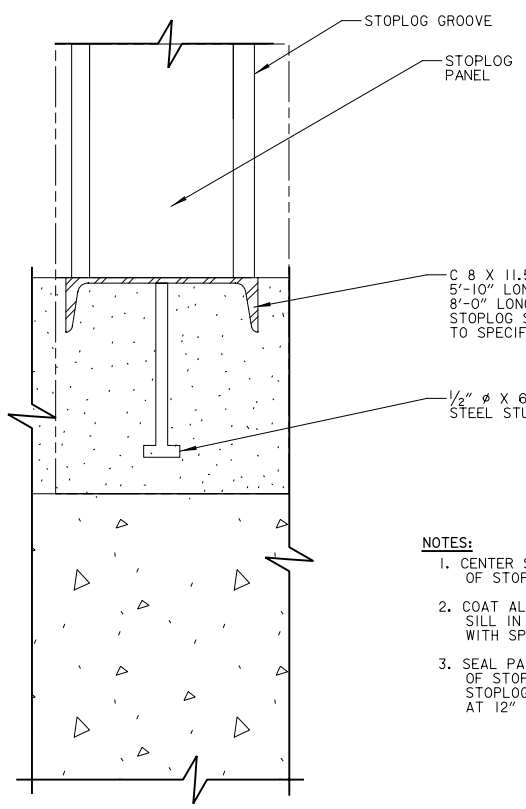

NOTES:

1. CENTER STOPLOG SILL ON CENTER OF STOPLOG GROOVE.
2. COAT ALL SURFACES OF STOPLOG SILL IN CONTACT WITH CONCRETE WITH SPECIFIED BONDING AGENT.
3. SEAL PAD TO EXTEND FULL HEIGHT OF STOPLOG GROOVE. ATTACH TO STOPLOG GROOVE W/ NO. 10 SS SCREWS AT 12" SPACINGS AND APPROVED ADHESIVE.

DETAIL

STOPLOG SILL TYP.

SCALE: 3" = 1'-0"

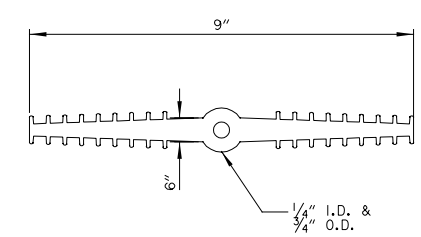

DETAIL

TYPICAL TYPE "Y" WATERSTOP

SCALE: NONE

REFERENCE	DWG. NO.
1. GENERAL NOTES	64/1212
2. GATEWELL L15	64/1223-1224
3. GATEWELL L16	64/1225-1228

1" 0 4" 8"

SCALE: 3" = 1'-0"

US Army Corps of Engineers
St. Paul District

Symbol	Description	Date	Appr.
2	NEW DRAWING ISSUED WITH AMENDMENT NO. 0002	07-07-04	

DESIGNED: JAJ
CHECKED: JAJ
DRAWN: DLF
DESIGNED:
CHECKED:

SCALE: AS SHOWN
DATE: MARCH 2004
CADD FILE NAME: CMS641231.DGN
SOLICITATION NO.: DACW37-03-B-0012
AE APPROVING OFFICIAL:

DEPARTMENT OF THE ARMY
ST. PAUL, MINNESOTA
CORPS OF ENGINEERS
ST. PAUL DISTRICT

SEH

CONTRACT DRAWING
EAST GRAND FORKS, HEARTSVILLE COULEE
FLOOD CONTROL
STOPLOGS & WATERSTOPS DETAILS

DRAWING NUMBER:
R-P-GF-64/1231

SHT 90 OF 118