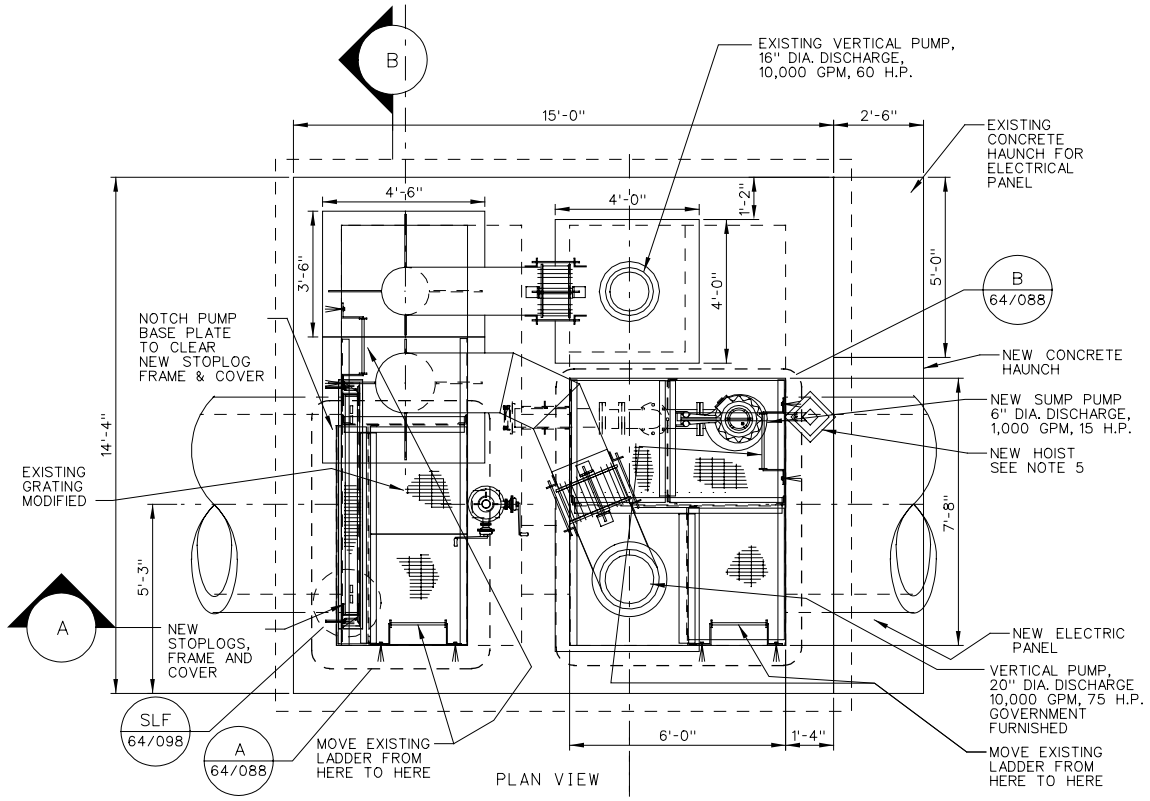

PLAN VIEW

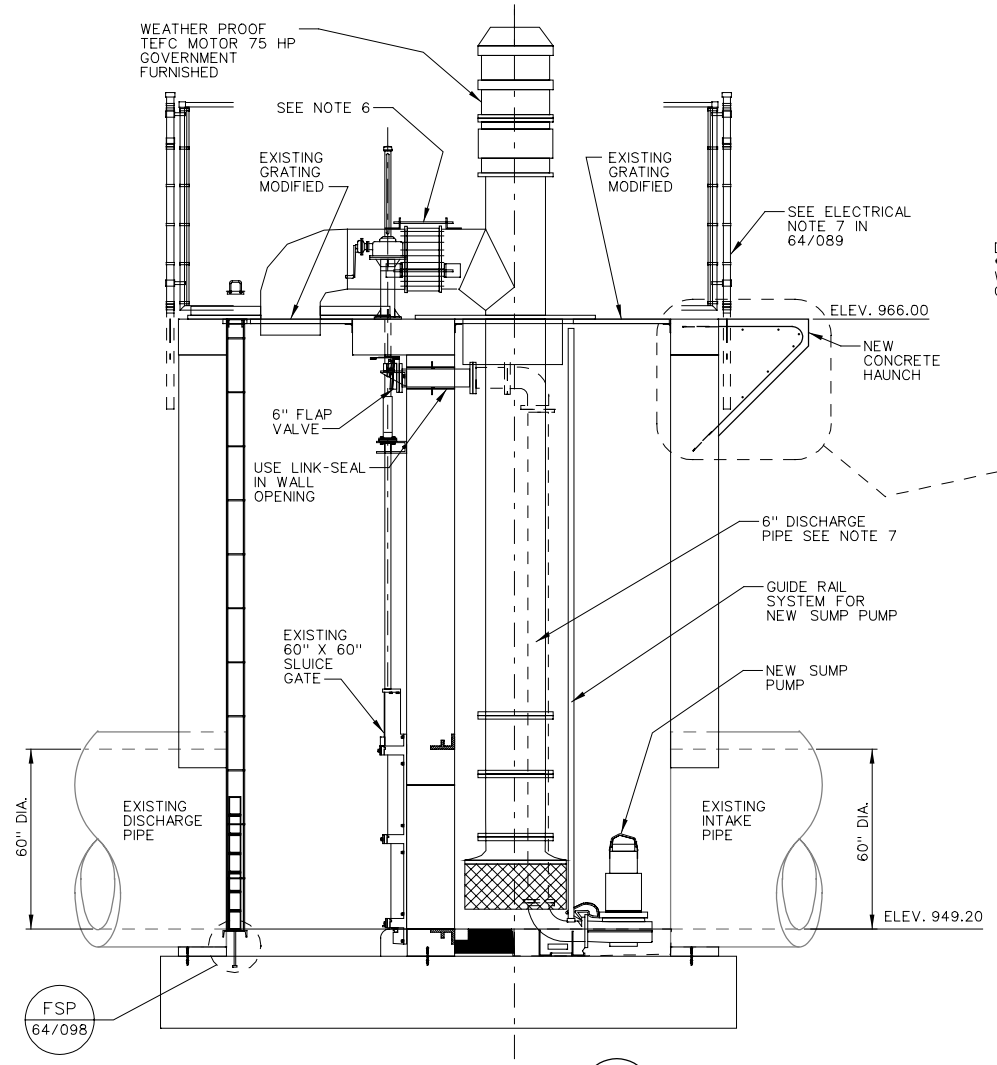

SECTION A
GENERAL ARRANGEMENT
SCALE: 1" = 1'-0"

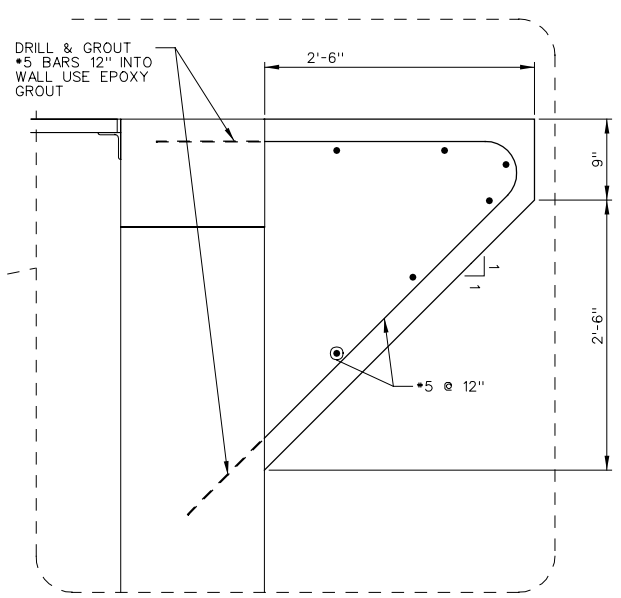

GENERAL ARRANGEMENT XP5 64/008
PUMP STATION 5
SCALE: 3/8"=1'-0"

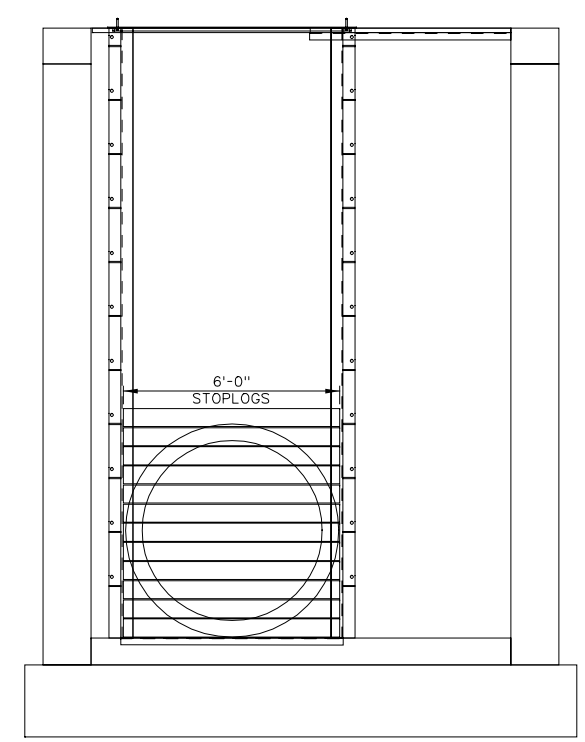

SECTION B
GENERAL ARRANGEMENT
SCALE: 1" = 1'-0"

1 0 2 4 6
SCALE: 3/8" = 1'-0"

NOTES:

1. PUMP STATION 5 IS EXISTING
2. CONTRACTOR TO INSTALL 2ND PUMP IN STATION AS SHOWN.
3. CONTRACTOR TO ADD STOPLOG FRAME TO STATION AS SHOWN.
4. CONTRATOR TO INSTALL SUMP PUMP AS SHOWN.
5. CONTRACTOR TO FURNISH AND INSTALL SUMP PUMP HOIST AS SHOWN 2000# CAPACITY THERN OR EQUAL.
6. USE PRESSER 38 COUPLING OR STRAD 6 AXIAL RESTRAINT CPLG OR EQUAL.
7. USE STAINLESS STEEL PIPE SUPPORTS.

US Army Corps of Engineers
St. Paul District

Symbol	Description	Date	Appr.

DESIGNED: TSF
CHECKED: TMP
DRAWN: GDE
DESIGNED: .
CHECKED: .
SCALE: AS SHOWN
CADD FILE NAME: 067_BWPA464087
DATE: 03/25/2002
SOL. NO.: DACW37-02-B-0000
AE APPROVING OFFICIAL:

DEPARTMENT OF THE ARMY
ST. PAUL, MINNESOTA
CORPS OF ENGINEERS
ST. PAUL DISTRICT

BCO REVIEW
JUNE 2002

WAHPETON, ND
STAGE 1
PUMP STATION 5
MODIFICATIONS
GENERAL ARRANGEMENT

DRAWING NUMBER:
R-P-WB-64/087

SHT 67 OF 81