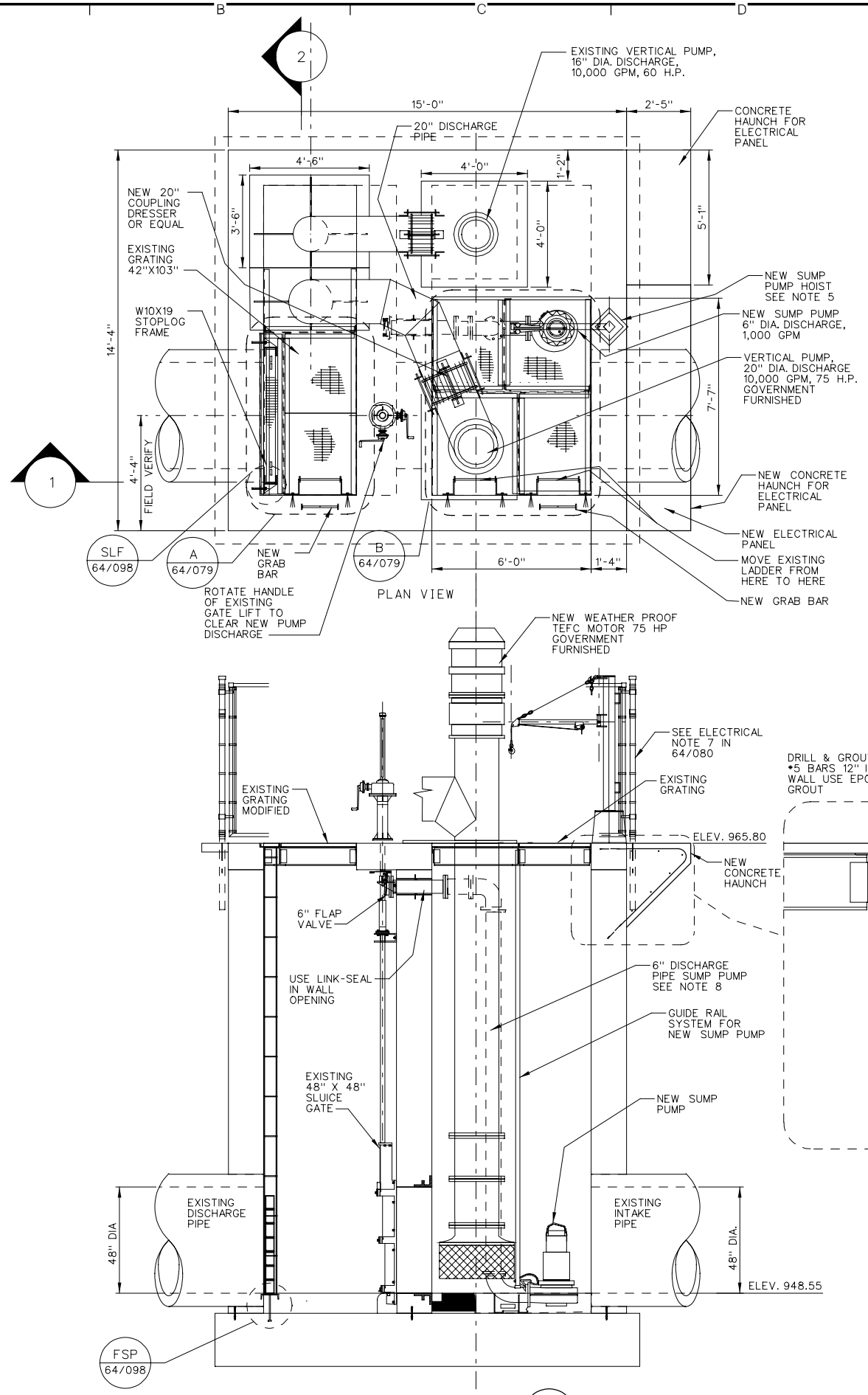

SECTION 1
GENERAL ARRANGEMENT
SCALE: 1" = 1'-0"

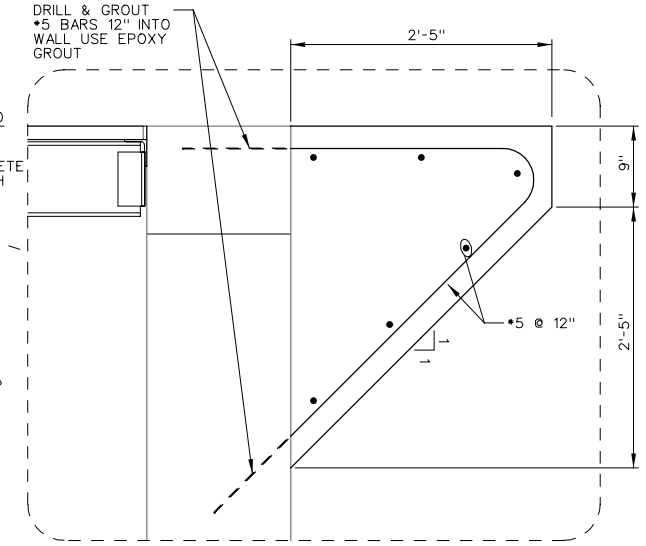

GENERAL ARRANGEMENT XP4 64/008
PUMP STATION 4
SCALE: 3/8"=1'-0"

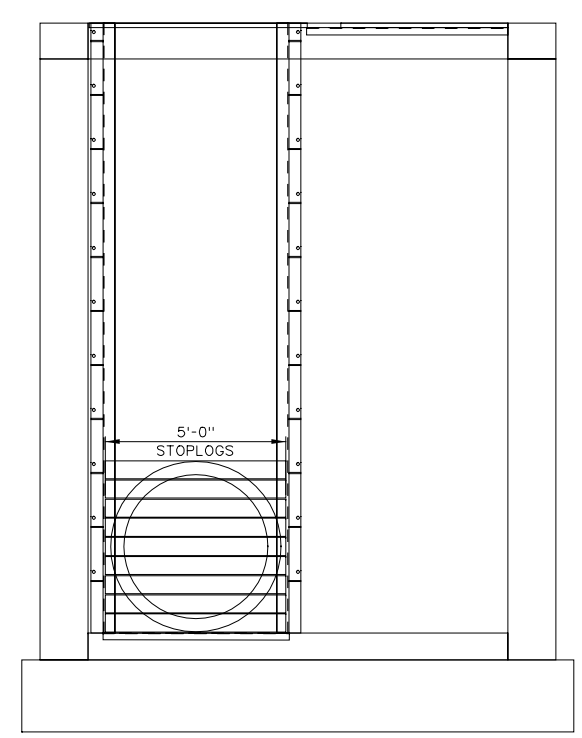

SECTION 2
GENERAL ARRANGEMENT
SCALE: 1" = 1'-0"

SCALE: 3/8" = 1'-0"

NOTES:

1. PUMP STATION 4 IS EXISTING
2. CONTRACTOR TO INSTALL 2ND PUMP IN STATION AS SHOWN.
3. CONTRACTOR TO ADD STOPLOG FRAME TO STATION AS SHOWN.
4. CONTRATOR TO INSTALL SUMP PUMP AS SHOWN.
5. CONTRACTOR TO FURNISH AND INSTALL SUMP PUMP HOIST AS SHOWN 2000 • CAPACITY THERN OR EQUAL.
6. PROVIDE PORTABLE HEATER PER SPECIFICATION.
7. ALL DIMENSIONS SHALL BE VERIFIED BY CONTRACTORS.
8. PROVIDE PIPE SUPPORTS FOR SUMP PUMP, DISCHARGE PIPE STAINLESS STEEL.

US Army Corps of Engineers
St. Paul District

Symbol	Description	Date	Appr.

DESIGNED: TSF
CHECKED: TMP
DRAWN: GDE
SCALE: AS SHOWN
DATE: 03/25/2002
CADD FILE NAME: 063_BWPA464078
SOLICITATION NO.: DACW37-02-B-0000
DESIGNED:
CHECKED:
AE APPROVING OFFICIAL:

DEPARTMENT OF THE ARMY
ST. PAUL, MINNESOTA
CORPS OF ENGINEERS
ST. PAUL DISTRICT

BCO REVIEW
JUNE 2002

WAHPETON, ND
STAGE 1
PUMP STATION 4
MODIFICATIONS
GENERAL ARRANGEMENT

DRAWING NUMBER:
R-P-WB-64/078

SHT 63 OF 81