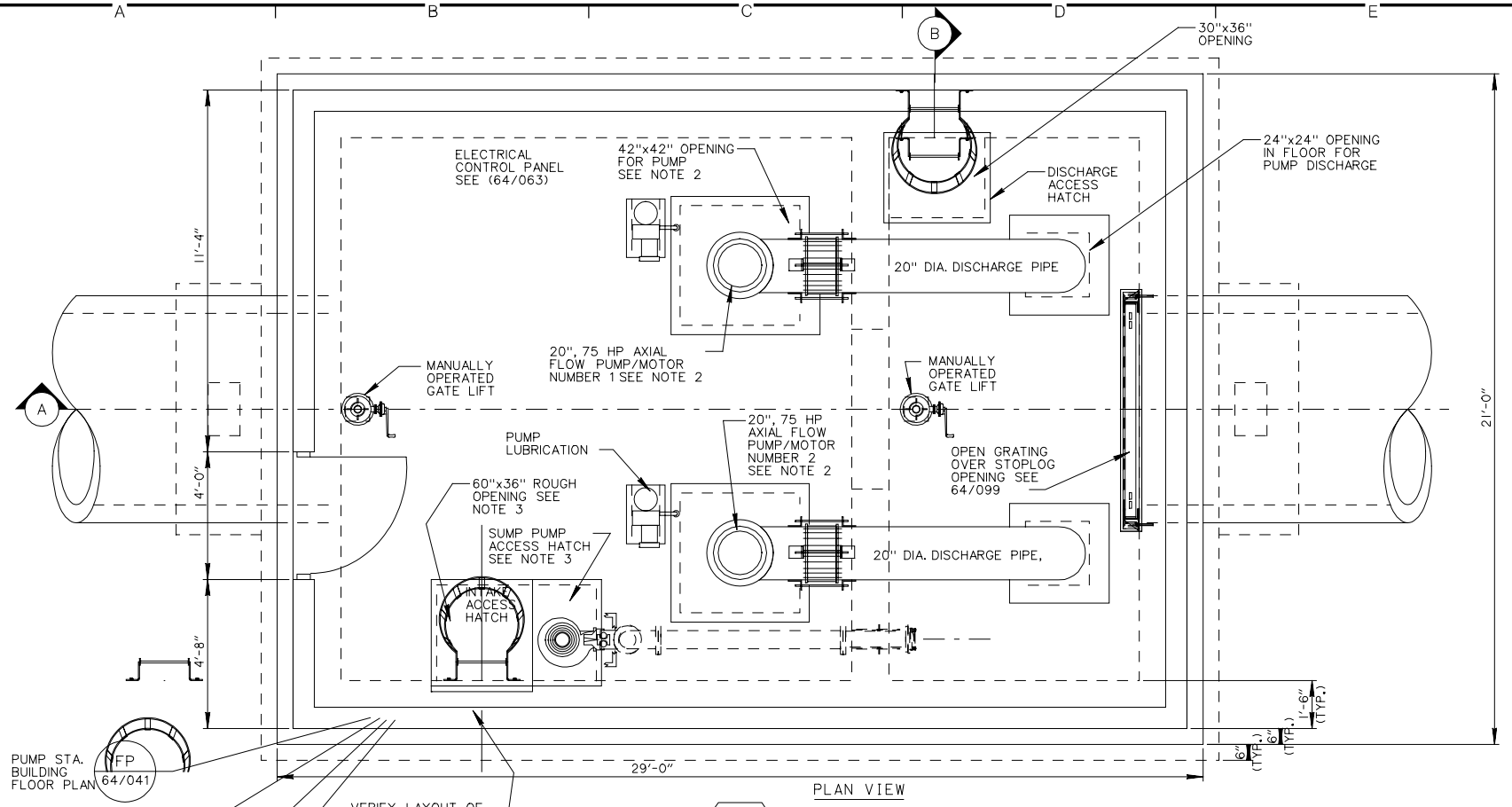

GENERAL ARRANGEMENT GA1A 64/003 64/011
PUMP STATION 1A & 7
SCALE: 3/8"=1'-0"

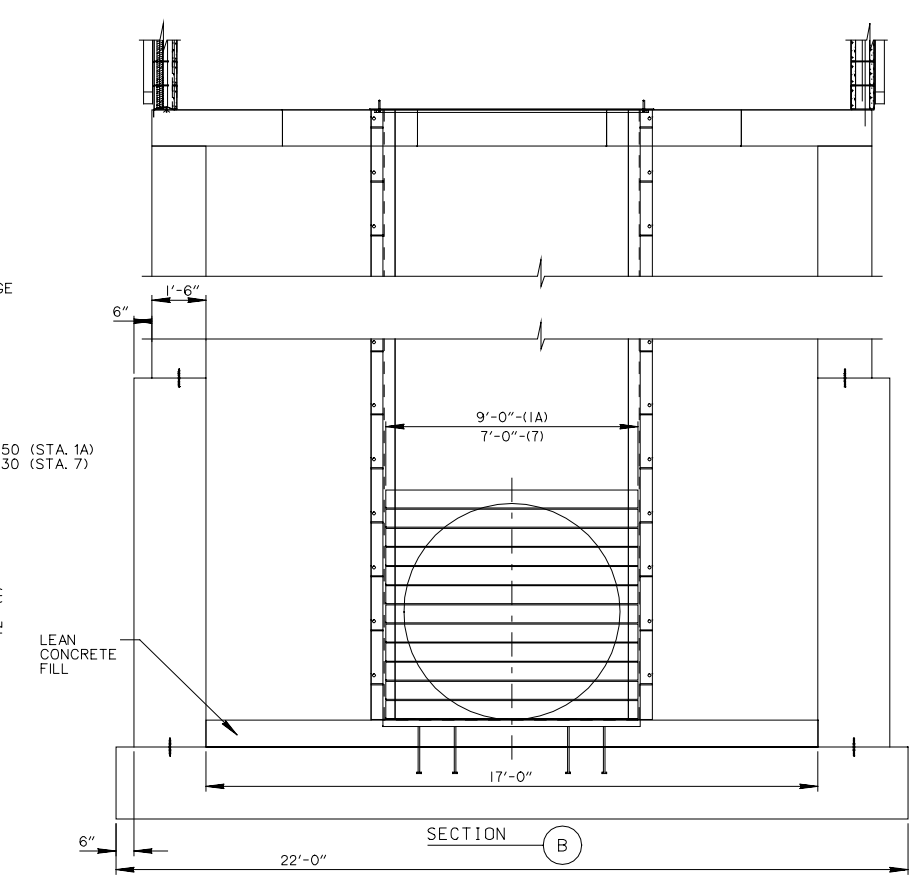

SCALE: 3/8" = 1'-0"

NOTES:

1. VERIFY ROUGH OPENING SIZE WITH PUMP SHOP DRAWINGS.
2. VERTICAL PUMPS ARE GOVERNMENT FURNISHED.
3. COMBINED HATCH FOR SUMP PUMP AND INTAKE ACCESS HATCH DOORS OPEN TO FRONT AND BACK OF STATION.

US Army Corps of Engineers
St. Paul District

Symbol	Description	Date	Appr.

DESIGNED: TSF
CHECKED: TMP
DRAWN: GDE
DESIGNED: .
CHECKED: .
SCALE: AS SHOWN
DATE: 03/25/2002
CADD FILE NAME: 040_BWA464040
SOL. NO.: DACW37-02-B-0000
AE APPROVING OFFICIAL:

DEPARTMENT OF THE ARMY
ST. PAUL, MINNESOTA
CORPS OF ENGINEERS
ST. PAUL DISTRICT

BCO REVIEW
JUNE 2002

WAHPETON, ND
STAGE 1
PUMP STA. 1A & 7
PUMP STA. 1A & 7
GENERAL ARRANGEMENT (ARCH)

DRAWING NUMBER:
R-P-WB-64/040

SHT 40 OF 81