Information for File # 2015-00542-MMJ; Elm Creek Bank Stabilization Project

Applicant: City of Plymouth

Corps Contact: Melissa Jenny

Address: 180 East Fifth Street, Ste. 700, St. Paul, Minnesota 55101

E-Mail: Melissa.m.jenny@usace.army.mil

Phone : **(651) 290-5363**

Primary County: Hennepin

Section: 7

Township: 118 North

Range: 22 West

Information Complete On: March 05, 2015

Posting Expires On: March 15, 2015

Authorization Type

This application is being reviewed in accordance with the practices for documenting Corps jurisdiction under Sections 9 & 10 of the Rivers and Harbor Act of 1899 and Section 404 of the Clean Water Act identified in Regulatory Guidance Letter 07-01. We have made a preliminary determination that the aquatic resources that would be impacted by the proposed project are regulated by the Corps of Engineers under Section 404 of the Clean Water Act. Our jurisdictional review and final jurisdictional determination could result in modifications to the scope of the project's regulated waterbody/wetland impacts and compensatory mitigation requirements identified above. An approved jurisdictional determination may be made prior to reaching a permit decision, and will be posted on the St. Paul District web page at http://www.mvp.usace.army.mil/.

PROJECT DESCRIPTION AND PURPOSE:
As proposed, this water quality improvement project would stabilize approximately 4,500 linear feet of Elm Creek, add rock vanes within the stream channel to increase roughness, establish a native buffer on both stream banks, and enhance habitat in and near the stream. This project would also enhance two regional stormwater ponds to incorporate additional treatment practices to increase suspended solid and dissolved phosphorous removal efficiency. The proposed improvements would reduce the total phosphorus (TP) annual load by an estimated 180 pounds per year and the total suspended solids (TSS) annual load by approximately 240 tons per year, a 10% reduction in overall watershed load. The proposed work in each area is described below:

Streambank stabilization would consist of bank reshaping, log toe with rootwads and rock cross vanes (See attached plan sheets C-104, C-105 and C-106 for locations and sheet D-101 for typical construction details):

1. Bank reshaping is intended to reduce short, vertical, eroding streambanks by grading them to a more gentle slope that will allow for vegetation to establish. Bank reshaping

would follow the existing bank/shoreline and would balance cut and fill on site. There will be no change in the water storage capacity or 100-yr high water elevation and the work will not reduce the cross sectional area of the channel or cause any hydraulic impacts. All grading of existing stream banks is to be balanced cut and fill with no export of soil.

2. Log toe with rootwads is intended to provide toe protection on taller, vertical, eroding streambanks (mostly outside bends). Log toe would be installed at existing toe line of the slope and some bank disturbance would be required to install the rootwads that pin the log toe in place. Final grading would make the vertical bank more shallow by grading from the top of the bank to the new log toe and rootwads and revegetated. Log toe with rootwads would follow the existing bank/shoreline and would balance cut and fill on site. There will be no change in the water storage capacity or 100-yr high water elevation and the work will not reduce the cross sectional area of the channel or cause any hydraulic impacts.

3. The cross vanes are not intended to modify channel slope, redirect flow, control grade or raise the channel; but have been included to introduce some scour (pool) features/habitat to the stream bed and to re-aerate the flows in Elm Creek to increase dissolved oxygen.

Enhancement of the two regional stormwater ponds (NURP Pond 1 and NURP Pond 2, See plan sheets C-107 and C-108 for locations and layout and sheet D-102 for construction details) would incorporate iron enhanced sand filters which would require temporary drawdown and disturbance to the vegetation adjacent to the stormwater ponds/wetlands (outside of the areas delineated as potential wetlands) as a trench is excavated with a top elevation at or slightly above existing water elevation. Excavation of the side slopes going into the ponds would be required to create space for the filter trench and the trench will have a non-pervious geomembrane installed prior to filling the lined trench with washed rock and an iron filing and sand mixture. All disturbed areas will be revegetated with native wet meadow vegetation following the completion of construction. The iron enhanced sand filter surface would not be vegetated.

NAME, AREA AND TYPES OF WATERS (INCLUDING WETLANDS) SUBJECT TO LOSS: The project as proposed includes work along approximately 4,500 linear feet of Elm Creek, resulting in the discharge of fill material into approximately 1.03 acres (44,940 square feet) of streambed below the Ordinary High Water Mark (OHWM) of the creek. The installation of the iron enhanced filter benches at NURP Ponds #1 & 2 would result in the discharge of fill material into approximately 0.18 acre (8,200 square feet) of shallow open water (non-wetland). See the attached impact chart for details, labeled as 2015-00542-MMJ, Posting figure 1.

ALTERNATIVES CONSIDERED: The no build alternative was considered, but if the City did not complete the project the creek banks along the areas identified for maintenance would continue to erode. The applicant also considered hard-armoring or placing riprap along portions of the creek identified for maintenance but instead decided to utilize more bio-engineering techniques (VRSS, bio-logs, root wads, etc.) because it would be reduce erosion and increase stream functions along this reach of Elm Creek.

COMPENSATORY MITIGATION: Was not proposed as part of this project. This is a water quality improvement project intended to improve the resource; it would not result in the loss of wetland functions or services.

Drawings: See attached figures labeled as 2015-00542-MMJ, Posting figures 1-19.

Aquatic Resource ID (as noted on overhead view)	**Aquatic Resource Type** (wetland, lake, tributary etc.)	**Type of Impact** (fill, excavate, drain, or remove vegetation)	**Duration of Impact** Permanent (P) or Temporary (T)[1]	**Size of Impact**[2]	**Overall Size of Aquatic Resource** [3]	**Existing Plant Community Type(s)** in Impact Area[4]	**County, Major Watershed #, and Bank Service Area #** of Impact Area[5]
Elm Creek	Stream	Stabilize Streambanks (23,760 ft^2 fill, 21,180 ft^2 excavate)	P	1.03 acres *4,500 lineal feet, entire reach, both banks*	N/A	Floodplain Forest (non-wetland)	Hennepin, 20,7
NURP Pond 1	Stormwater Pond	Install iron enhanced filter bench (3,200 ft^2 excavate)	P	0.07 acres (adjacent to pond)	N/A	Shallow, Open Water (non-wetland)	Hennepin, 20,7
NURP Pond 2	Stormwater Pond	Install iron enhanced filter bench (5,000 ft^2 excavate)	P	0.11 acres (adjacent to pond)	N/A	Shallow, Open Water (non-wetland)	Hennepin, 20,7

Plot Date & Time: 19 January 2015 2:47 PM

CONSTRUCTION PLANS FOR ELM CREEK STREAM RESTORATION AND WATER QUALITY IMPROVEMENTS CITY PROJECT NO. 14006

PREPARED FOR CITY OF PLYMOUTH,MN

JANUARY 2015

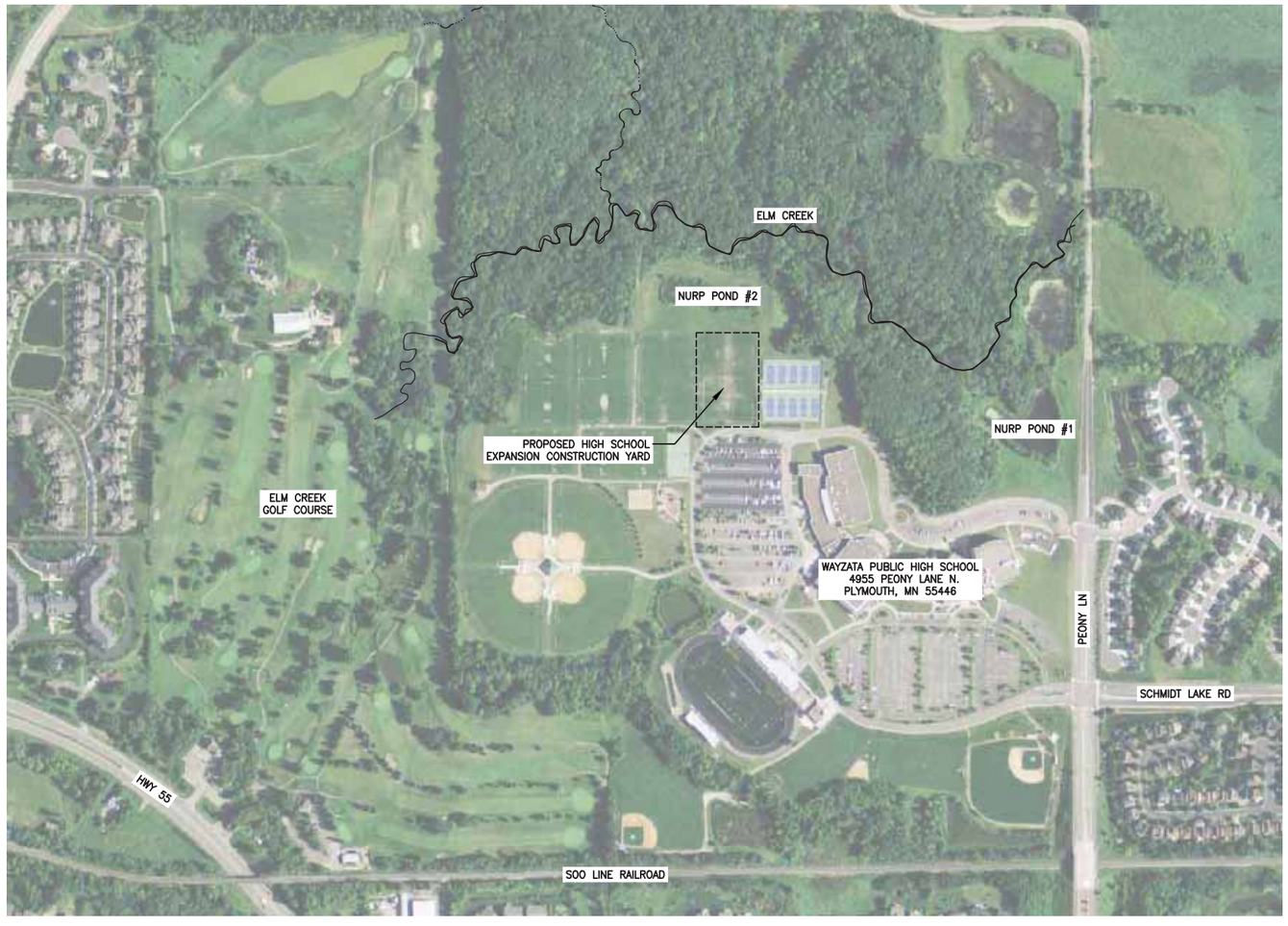

PROJECT VICINITY MAP

INDEX OF SHEETS

CIVIL

G-101	TITLE AND INDEX SHEET
C-101	EXISTING CONDITIONS
C-102	TREE SURVEY
C-103	TREE REMOVAL & HARVESTING PLAN
C-104	45+00 TO 29+50 STREAM RESTORATION PLAN & PROFILE
C-105	30+25 TO 14+50 STREAM RESTORATION PLAN & PROFILE
C-106	15+50 TO 0+00 STREAM RESTORATION PLAN & PROFILE
C-107	NURP POND 1 IRON ENHANCED SAND FILTER
C-108	NURP POND 2 IRON ENHANCED SAND FILTER
C-109	SITE ACCESS PLAN
EC-101	SWPPP
EC-102	EROSION CONTROL PLAN
D-101	DETAILS
D-102	DETAILS
D-103	DETAILS

NOTE: THE SUBSURFACE UTILITY INFORMATION IN THIS PLAN IS UTILITY QUALITY LEVEL D. THIS QUALITY LEVEL WAS DETERMINED ACCORDING TO THE GUIDELINES OF CI/ASCE 38-2 ENTITLED "STANDARD GUIDELINES FOR THE COLLECTION AND DEPICTION OF EXISTING SUBSURFACE UTILITY DATA".

EXACT LOCATION OF UNDERGROUND UTILITIES SUCH AS GAS, TELEPHONE, FIBER OPTIC, PIPELINES, ELECTRIC, AND CABLE TV ARE UNKNOWN.

WARNING:

THE CONTRACTOR SHALL BE RESPONSIBLE FOR CALLING FOR LOCATIONS OF ALL EXISTNG UTILITIES. THEY SHALL COOPERATE WITH ALL UTILITY COMPANIES IN MAINTAINING THEIR SERVICE AND/OR RELOCATION OF LINES.

THE CONTRACTOR SHALL CONTACT GOPHER STATE ONE CALL AT 651-454-0002 AT LEAST 48 HOURS IN ADVANCE FOR THE LOCATIONS OF ALL UNDERGROUND WIRES, CABLES, CONDUITS, PIPES, MANHOLES, VALVES OR OTHER BURIED STRUCTURES BEFORE DIGGING. THE CONTRACTOR SHALL REPAIR OR REPLACE THE ABOVE WHEN DAMAGED DURING CONSTRUCTION AT NO COST TO THE OWNER.

CALL BEFORE YOU DIG
GOPHER STATE ONE CALL
TWIN CITY AREA: 651-454-0002
TOLL FREE 1-800-252-1166

N

0 200 400
GRAPHIC SCALE IN FEET

REV	REVISION DESCRIPTION	DWN	APP	REV DATE
0	ISSUED FOR REVIEW			11/13/13

SEAL

I HEREBY CERTIFY THAT THIS PLAN, SPECIFICATION, OR REPORT WAS PREPARED BY ME OR UNDER MY DIRECT SUPERVISION AND THAT I AM A DULY LICENSED PROFESSIONAL ENGINEER UNDER THE LAWS OF THE STATE OF MINNESOTA.

DATE _____ REG. NO. _____

PRIME CONSULTANT

WENCK ASSOCIATES

Responsive partner. Exceptional outcomes.

PROJECT TITLE
ELM CREEK STREAM RESTORATION AND WATER QUALITY IMPROVEMENTS CITY PROJECT NO. 14006

CITY OF PLYMOUTH

3400 PLYMOUTH BOULEVARD
PLYMOUTH, MN 55447

SHEET TITLE
TITLE AND INDEX SHEET

DWN BY	CHK'D	APP'D	DWG DATE	NOV 2014
LNJ	EAM	EAM	SCALE	AS SHOWN

PROJECT NO.	SHEET NO.	REV NO.
1756-07	G-101	0

M:\1756\07 Elm Creek Design\CAD\Civil\C-101 TITLE AND INDEX.dwg

Plot Date & Time: 16 January 2015 3:06 PM

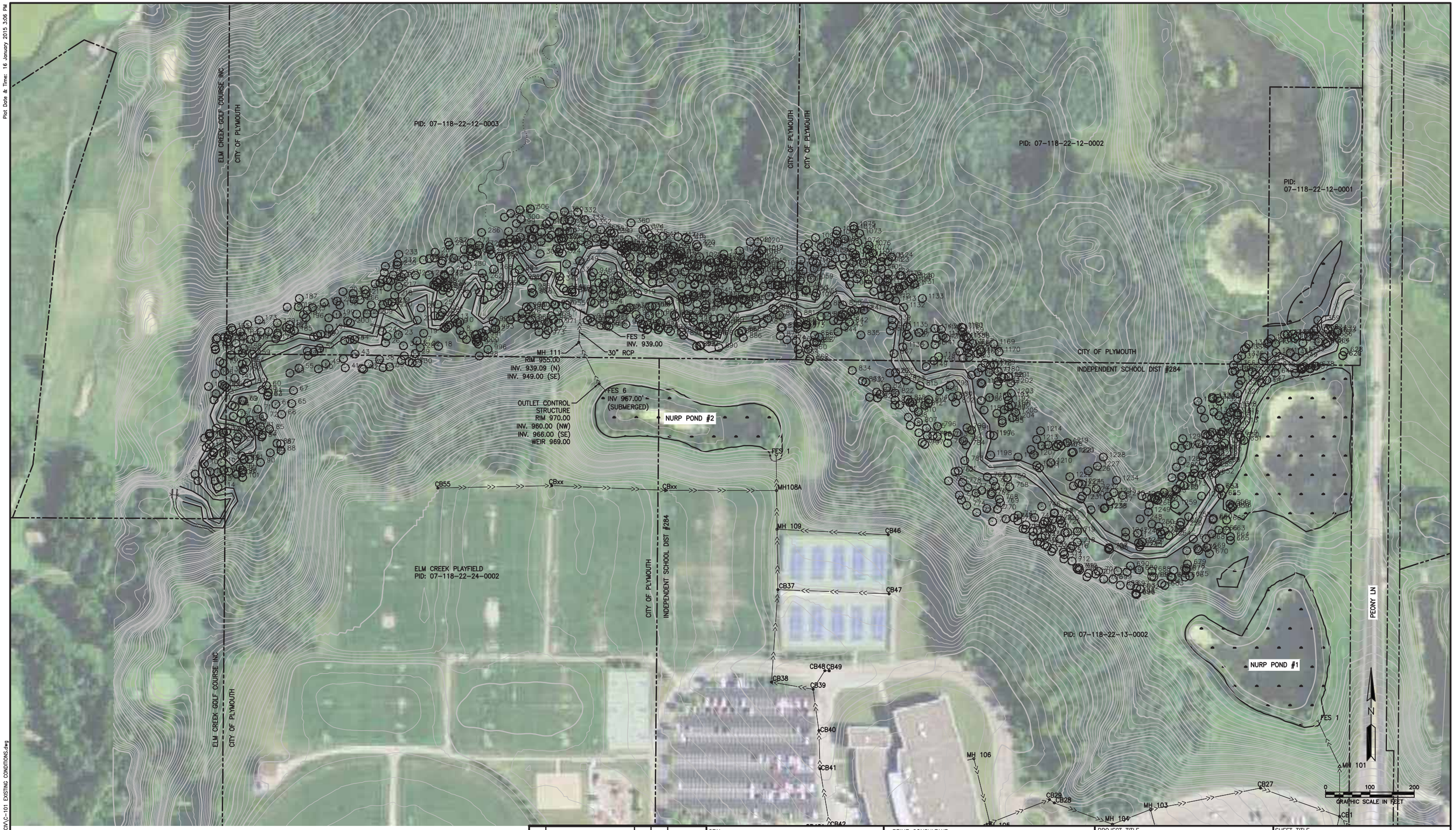

LEGEND

- XXX DECIDUOUS TREE
- XXX CONIFEROUS TREE
- DELINEATED WETLAND
- EXISTING CONTOUR – MINOR (1')
- EXISTING CONTOUR – MAJOR (5')
- CBxx CATCH BASIN
- EXISTING STORM SEWER
- PARCEL LINE

REV	REVISION DESCRIPTION	DWN	APP	REV DATE
0	ISSUED FOR REVIEW			11/13/13

SEAL

I HEREBY CERTIFY THAT THIS PLAN, SPECIFICATION, OR REPORT WAS PREPARED BY ME OR UNDER MY DIRECT SUPERVISION AND THAT I AM A DULY LICENSED PROFESSIONAL ENGINEER UNDER THE LAWS OF THE STATE OF MINNESOTA.

DATE _____ REG. NO. _____

PRIME CONSULTANT

WENCK ASSOCIATES

Responsive partner. Exceptional outcomes.

PROJECT TITLE

ELM CREEK STREAM RESTORATION AND WATER QUALITY IMPROVEMENTS
CITY PROJECT NO. 14006

CITY OF PLYMOUTH

3400 PLYMOUTH BOULEVARD
PLYMOUTH, MN 55447

SHEET TITLE

EXISTING CONDITONS

DWN BY	CHK'D	APP'D	DWG DATE	NOV 2014
LNJ	EAM	EAM	SCALE	AS SHOWN

PROJECT NO.	SHEET NO.	REV NO.
1756-07	C-101	0

M:\1756\07 Elm Creek Design\CAD\City\C-101 EXISTING CONDITIONS.dwg

Plot Date & Time: 19 January 2015 11:02 AM

LEGEND

- XXX DECIDUOUS TREE
- XXX CONIFEROUS TREE
- DELINEATED WETLAND
- EXISTING CONTOUR – MINOR (1')
- EXISTING CONTOUR – MAJOR (5')
- CBxx CATCH BASIN
- EXISTING STORM SEWER
- PARCEL LINE

REV	REVISION DESCRIPTION	DWN	APP	REV DATE
0	ISSUED FOR REVIEW			11/13/13

SEAL

I HEREBY CERTIFY THAT THIS PLAN, SPECIFICATION, OR REPORT WAS PREPARED BY ME OR UNDER MY DIRECT SUPERVISION AND THAT I AM A DULY LICENSED PROFESSIONAL ENGINEER UNDER THE LAWS OF THE STATE OF MINNESOTA.

DATE _____ REG. NO. _____

PRIME CONSULTANT

WENCK ASSOCIATES

Responsive partner. Exceptional outcomes.

PROJECT TITLE

ELM CREEK STREAM RESTORATION AND WATER QUALITY IMPROVEMENTS
CITY PROJECT NO. 14006

CITY OF PLYMOUTH

3400 PLYMOUTH BOULEVARD
PLYMOUTH, MN 55447

SHEET TITLE

AQUATIC RESOURCES

DWN BY	CHK'D	APP'D	DWG DATE	NOV 2014
LNJ	EAM	EAM	SCALE	AS SHOWN

PROJECT NO.	SHEET NO.	REV NO.
1756-07	C-101A	0

M:\1756\07 Elm Creek Design\CAD\City\C-101A AQUATIC RESOURCES.dwg

Plot Date & Time: 16 January 2015 10:47 AM

Tree Survey Summary	
Species	Qty
American elm	67
Apple	1
Basswood	281
Bigtooth Aspen	13
Bitternut hickory	30
Black ash	3
Black Cherry	24
Box Elder	131
Cottonwood	3
Green Ash	332
Ironwood	4
Quaking Aspen	3
Red Oak	40
Silver Maple	45
Sugar Maple	238
White Oak	17
Willow	1

LEGEND

- XXX DECIDUOUS TREE
- XXX CONIFEROUS TREE
- DELINEATED WETLAND
- EXISTING CONTOUR – MINOR (1')
- EXISTING CONTOUR – MAJOR (5')
- CBxx CATCH BASIN
- EXISTING STORM SEWER

REV	REVISION DESCRIPTION	DWN	APP	REV DATE
0	ISSUED FOR REVIEW			11/13/13

SEAL

I HEREBY CERTIFY THAT THIS PLAN, SPECIFICATION, OR REPORT WAS PREPARED BY ME OR UNDER MY DIRECT SUPERVISION AND THAT I AM A DULY LICENSED PROFESSIONAL ENGINEER UNDER THE LAWS OF THE STATE OF MINNESOTA.

DATE _____ REG. NO. _____

PRIME CONSULTANT

WENCK ASSOCIATES

Responsive partner. Exceptional outcomes.

PROJECT TITLE

ELM CREEK STREAM RESTORATION AND WATER QUALITY IMPROVEMENTS
CITY PROJECT NO. 14006

CITY OF PLYMOUTH

3400 PLYMOUTH BOULEVARD
PLYMOUTH, MN 55447

SHEET TITLE

TREE SURVEY

DWN BY	CHK'D	APP'D	DWG DATE	
	EAM	EAM	NOV 2014	
			SCALE	AS SHOWN
PROJECT NO.	SHEET NO.			REV NO.
1756–07	C–102			0

M:\1756\07 Elm Creek Design\CAD\C07\C-102 TREE SURVEY.dwg

Plot Date & Time: 16 January 2015 12:36 PM

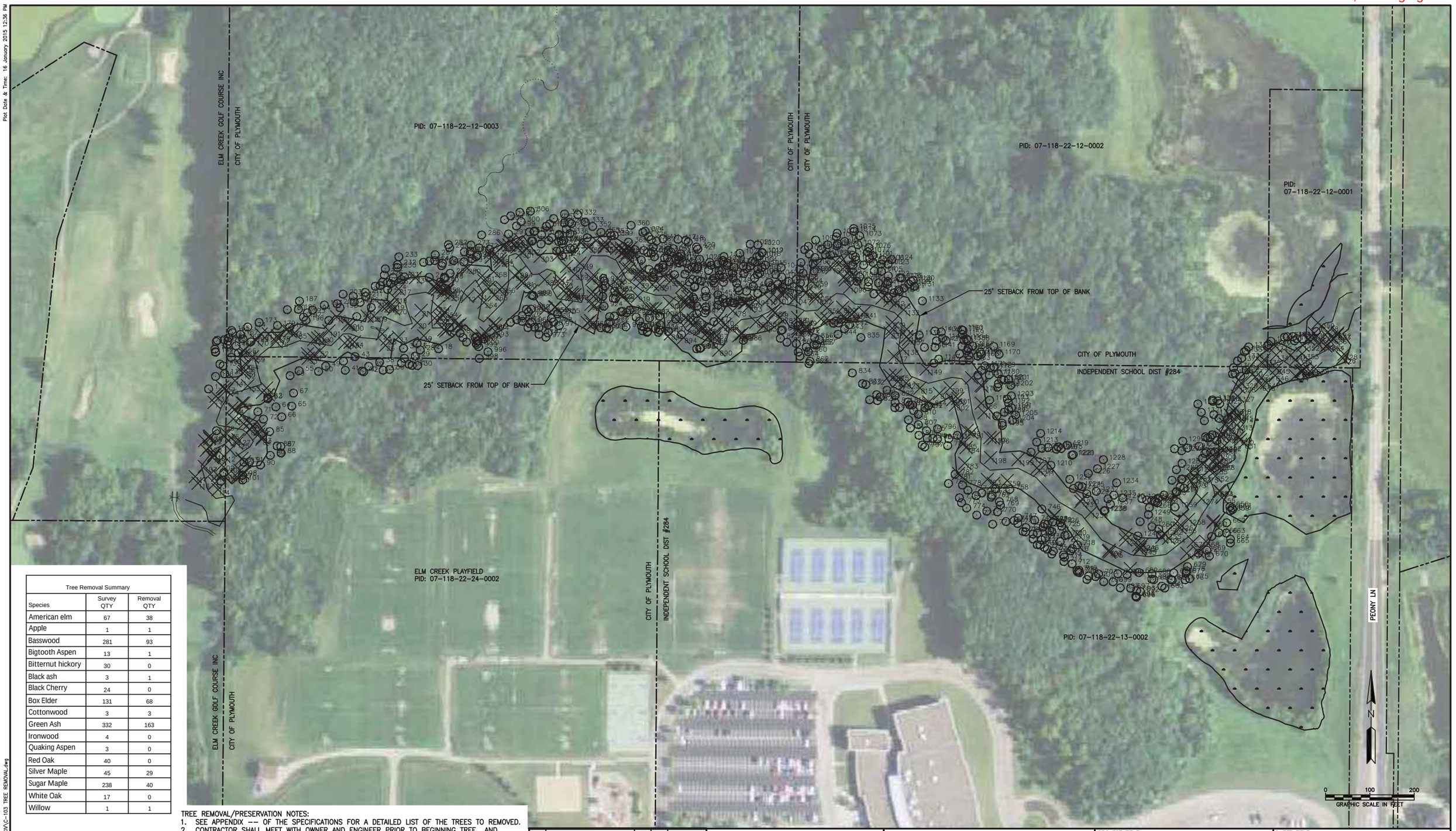

Tree Removal Summary		
Species	Survey QTY	Removal QTY
American elm	67	38
Apple	1	1
Basswood	281	93
Bigtooth Aspen	13	1
Bitternut hickory	30	0
Black ash	3	1
Black Cherry	24	0
Box Elder	131	68
Cottonwood	3	3
Green Ash	332	163
Ironwood	4	0
Quaking Aspen	3	0
Red Oak	40	0
Silver Maple	45	29
Sugar Maple	238	40
White Oak	17	0
Willow	1	1

LEGEND

- XXX DECIDUOUS TREE
- XXX CONIFEROUS TREE
- DELINEATED WETLAND
- XXX TREE TO BE REMOVED
- PARCEL LINE

TREE REMOVAL/PRESERVATION NOTES:

1. SEE APPENDIX -- OF THE SPECIFICATIONS FOR A DETAILED LIST OF THE TREES TO REMOVED.
2. CONTRACTOR SHALL MEET WITH OWNER AND ENGINEER PRIOR TO BEGINNING TREE AND BRUSH REMOVALS/HARVESTING.
3. ALL BRUSH REMOVAL IS CONSIDERED INCIDENTAL. ANY COMPENSATION SHALL BE INCLUDED IN THE BID ITEM TREE CLEARING AND HARVESTING.
4. PROTECT EXISTING TREES THAT ARE NOT TO BE REMOVED.
5. WHEN TREE ROOTS ARE ENCOUNTERED THAT MUST BE REMOVED, CUT ROOTS CLEANLY AS FAR FROM THE TREE AS POSSIBLE AND IMMEDIATELY WATER AND BACKFILL OVER THE ROOTS TO PREVENT DRYING.
6. TREES SHALL BE HARVESTED FOR USE AS LOG TOE WITH ROOT WADS, NURSERY LOGS, AND SEATING LOGS (SEE SHEETS C-104 TO C-106). REMAINING TREES SHALL BE CHIPPED AND SPREAD ON EXISTING TRAILS OR DISPOSED OF OFFSITE.

REV	REVISION DESCRIPTION	DWN	APP	REV DATE
0	ISSUED FOR REVIEW			11/13/13

SEAL

I HEREBY CERTIFY THAT THIS PLAN, SPECIFICATION, OR REPORT WAS PREPARED BY ME OR UNDER MY DIRECT SUPERVISION AND THAT I AM A DULY LICENSED PROFESSIONAL ENGINEER UNDER THE LAWS OF THE STATE OF MINNESOTA.

DATE _____ REG. NO. _____

PRIME CONSULTANT

WENCK ASSOCIATES

Responsive partner. Exceptional outcomes.

PROJECT TITLE

ELM CREEK STREAM RESTORATION AND WATER QUALITY IMPROVEMENTS
CITY PROJECT NO. 14006

CITY OF PLYMOUTH

3400 PLYMOUTH BOULEVARD
PLYMOUTH, MN 55447

SHEET TITLE

TREE REMOVAL & HARVESTING PLAN

DWN BY	CHK'D	APP'D	DWG DATE	REV NO.
LNJ	EAM	EAM	NOV 2014	0

SCALE AS SHOWN

PROJECT NO. 1756-07 | SHEET NO. C-103

M:\1756\07 Elm Creek Design\CAD\Civil\C-103 TREE REMOVAL.dwg

Plot Date & Time: 16 January 2015 12:36 PM

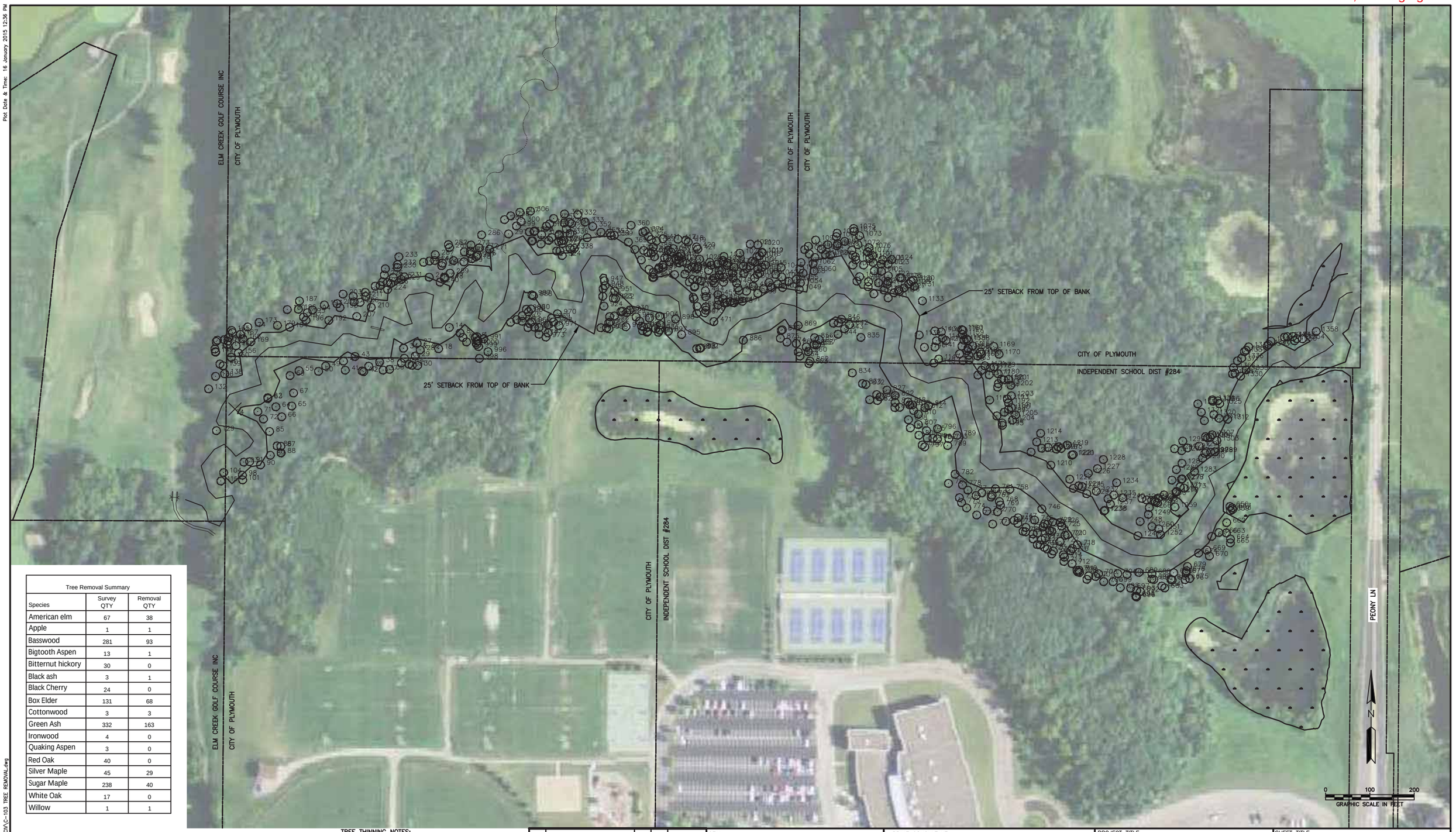

Tree Removal Summary		
Species	Survey QTY	Removal QTY
American elm	67	38
Apple	1	1
Basswood	281	93
Bigtooth Aspen	13	1
Bitternut hickory	30	0
Black ash	3	1
Black Cherry	24	0
Box Elder	131	68
Cottonwood	3	3
Green Ash	332	163
Ironwood	4	0
Quaking Aspen	3	0
Red Oak	40	0
Silver Maple	45	29
Sugar Maple	238	40
White Oak	17	0
Willow	1	1

LEGEND

- XXX DECIDUOUS TREE
- XXX CONIFEROUS TREE
- DELINEATED WETLAND
- EXISTING CONTOUR – MINOR (1')
- EXISTING CONTOUR – MAJOR (5')
- CBxx CATCH BASIN
- EXISTING STORM SEWER
- XXX TREE TO BE REMOVED
- PARCEL LINE

TREE THINNING NOTES:

THE PRIORITY FOR TREE AND SHRUB REMOVAL SHALL BE IN THE ORDER OF:

1. INVASIVE SPECIES – BUCKTHORN.
2. SOFTWOOD & DISEASE PRONE SPECIES – BOXELDER, ASH AND ELM.
3. FALLEN, LEANING AND SWEEPING TREES AND LIMBS.
4. OTHERS AS APPROVED BY PROJECT ENGINEER AND LANDOWNER.

REV	REVISION DESCRIPTION	DWN	APP	REV DATE
0	ISSUED FOR REVIEW			11/13/13

SEAL

I HEREBY CERTIFY THAT THIS PLAN, SPECIFICATION, OR REPORT WAS PREPARED BY ME OR UNDER MY DIRECT SUPERVISION AND THAT I AM A DULY LICENSED PROFESSIONAL ENGINEER UNDER THE LAWS OF THE STATE OF MINNESOTA.

DATE _____ REG. NO. _____

PRIME CONSULTANT

WENCK ASSOCIATES

Responsive partner. Exceptional outcomes.

PROJECT TITLE

ELM CREEK STREAM RESTORATION AND WATER QUALITY IMPROVEMENTS
CITY PROJECT NO. 14006

CITY OF PLYMOUTH

3400 PLYMOUTH BOULEVARD
PLYMOUTH, MN 55447

SHEET TITLE

TREE REMOVAL & HARVESTING PLAN

DWN BY	CHK'D	APP'D	DWG DATE	SCALE
	EAM	EAM	NOV 2014	AS SHOWN

PROJECT NO.	SHEET NO.	REV NO.
1756–07	C–103a	0

M:\1756\07 Elm Creek Design\CAD\C3\C-103 TREE REMOVAL.dwg

Plot Date & Time: 19 January 2015 1:32 PM

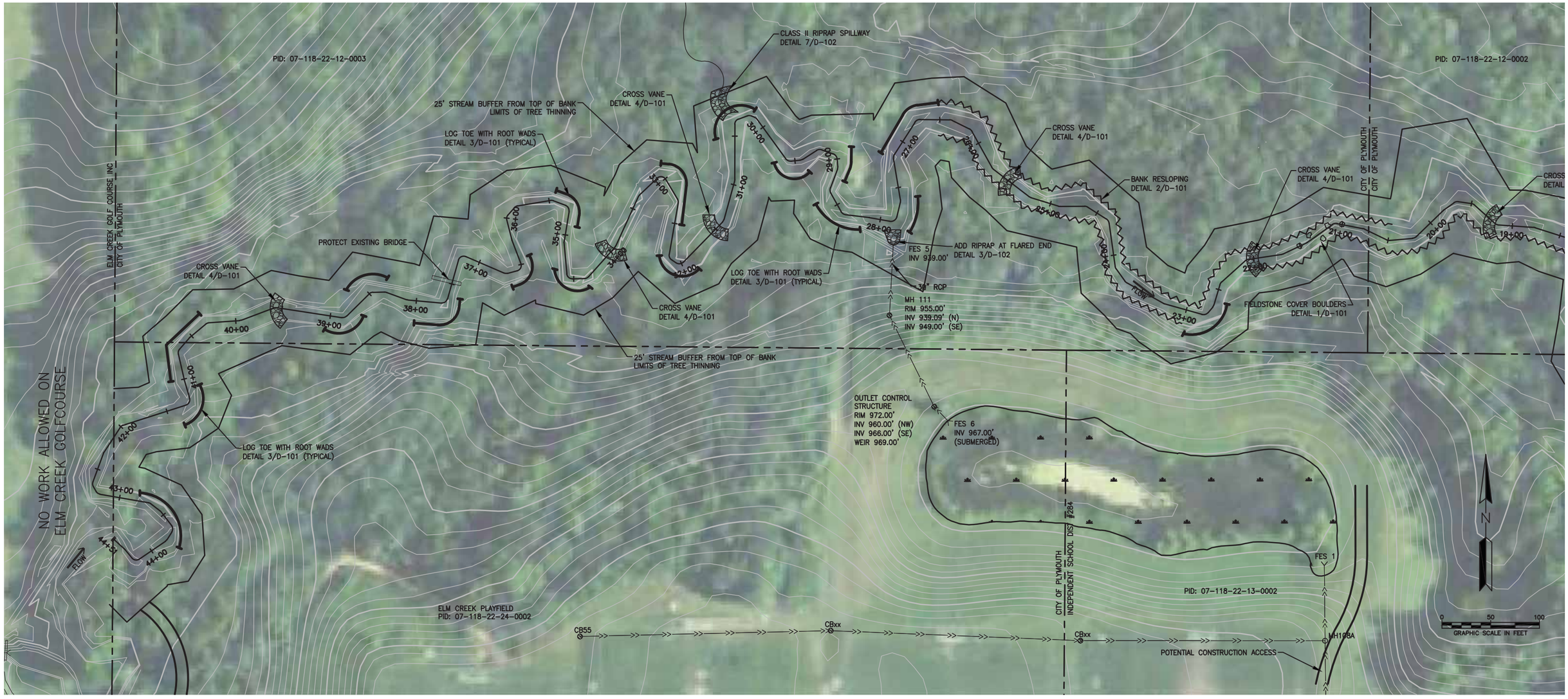

ELM CREEK CENTERLINE PROFILE

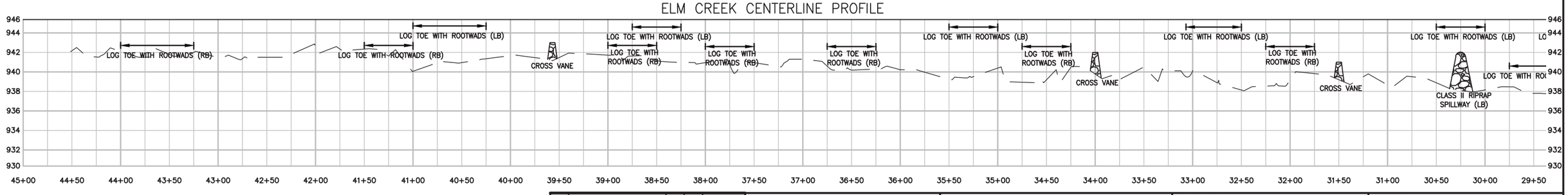

LEGEND

- DELINEATED WETLAND
- BANK RESLOPING
- LOG TOE WITH ROOD WADS
- SHRUB PLANTING
- CBxx CATCH BASIN
- EXISTING STORM SEWER
- PARCEL LINE

NOTES:

1. TREES USED FOR NURSERY LOGS AND SEATING LOGS SHALL BE LIMITED TO STRAIGHT SECTIONS OF MAPLE, ELM, AND BASSWOOD. LOCATIONS OF NURSERY LOGS AND SEATING LOGS SHALL BE AS DIRECTED BY ENGINEER.
2. FLOTATION SILT CURTAIN IS REQUIRED CONTAIN SOIL MATERIAL DURING BANK RESLOPING OPERATIONS. FLOTATION SILT CURTAIN SHALL BE MAINTAINED AND RELOCATED AS OPERATIONS OF BANK RESLOPING PROGRESS. FLOTATION SILT CURTAIN SHALL NOT BE RELOCATED UNTIL CURRENT SITE IS STABILIZED.

REV	REVISION DESCRIPTION	DWN	APP	REV DATE
0	ISSUED FOR REVIEW			11/13/13

SEAL

I HEREBY CERTIFY THAT THIS PLAN, SPECIFICATION, OR REPORT WAS PREPARED BY ME OR UNDER MY DIRECT SUPERVISION AND THAT I AM A DULY LICENSED PROFESSIONAL ENGINEER UNDER THE LAWS OF THE STATE OF MINNESOTA.

DATE _____ REG. NO. _____

PRIME CONSULTANT

WENCK ASSOCIATES

Responsive partner. Exceptional outcomes.

PROJECT TITLE

ELM CREEK STREAM RESTORATION AND WATER QUALITY IMPROVEMENTS
CITY PROJECT NO. 14006

CITY OF PLYMOUTH

3400 PLYMOUTH BOULEVARD
PLYMOUTH, MN 55447

SHEET TITLE

45+00 TO 29+50
STREAM RESTORATION
PLAN & PROFILE

DWN BY	CHK'D	APP'D	DWG DATE	
LNJ	EAM	EAM	NOV 2014	
			SCALE	AS SHOWN
PROJECT NO.		SHEET NO.		REV NO.
1756-07		C-104		0

M:\1756\07 Elm Creek Design\CAD\CIV\C-104 STREAM PLAN AND PROFILE.dwg

Plot Date & Time: 19 January 2015 1:32 PM

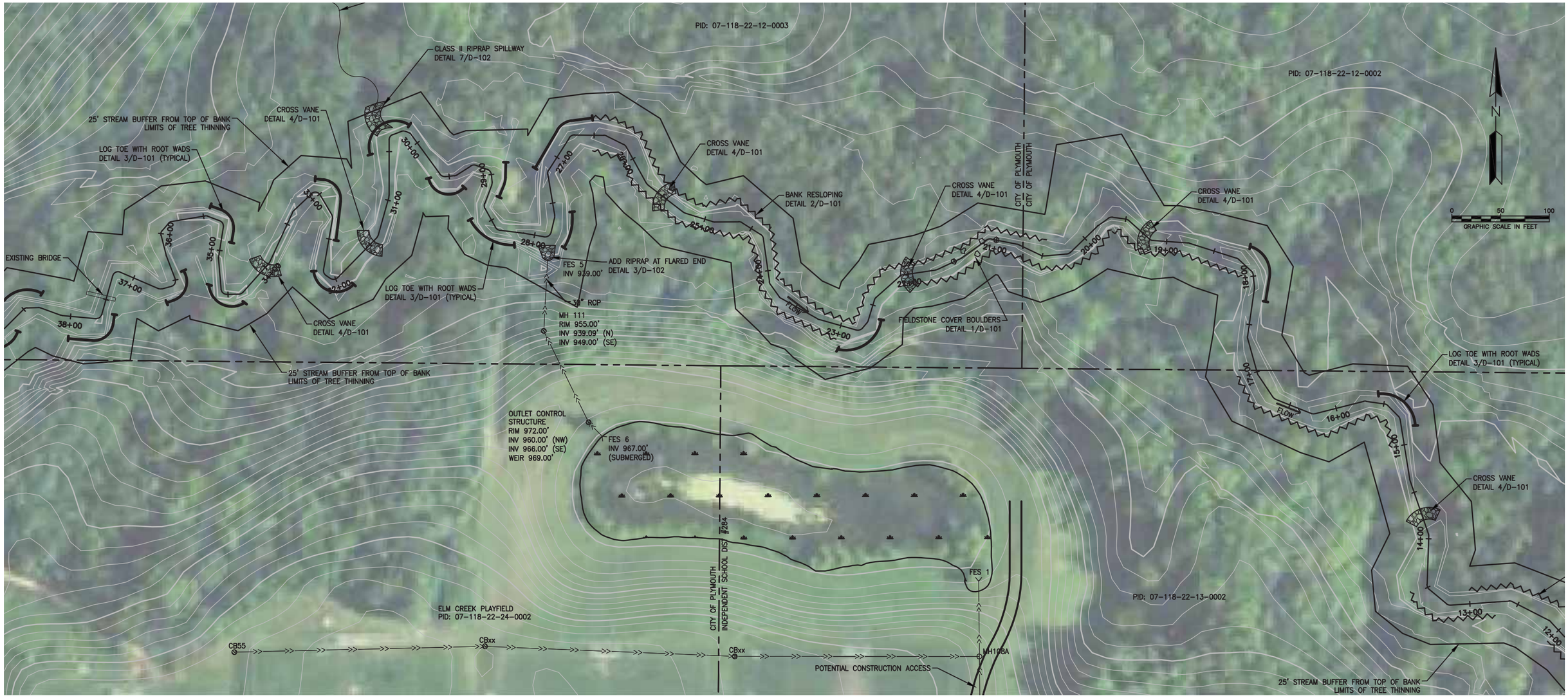

ELM CREEK CENTERLINE PROFILE

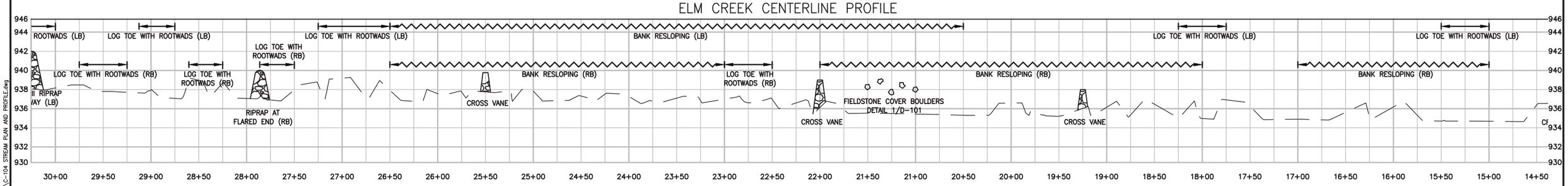

LEGEND

- DELINEATED WETLAND
- BANK RESLOPING
- LOG TOE WITH ROOD WADS
- SHRUB PLANTING
- CBxx CATCH BASIN
- EXISTING STORM SEWER
- PARCEL LINE

NOTES:

1. TREES USED FOR NURSERY LOGS AND SEATING LOGS SHALL BE LIMITED TO STRAIGHT SECTIONS OF MAPLE, ELM, AND BASSWOOD. LOCATIONS OF NURSERY LOGS AND SEATING LOGS SHALL BE AS DIRECTED BY ENGINEER.
2. FLOTATION SILT CURTAIN IS REQUIRED CONTAIN SOIL MATERIAL DURING BANK RESLOPING OPERATIONS. FLOTATION SILT CURTAIN SHALL BE MAINTAINED AND RELOCATED AS OPERATIONS OF BANK RESLOPING PROGRESS. FLOTATION SILT CURTAIN SHALL NOT BE RELOCATED UNTIL CURRENT SITE IS STABILIZED.

REV	REVISION DESCRIPTION	DWN	APP	REV DATE
0	ISSUED FOR REVIEW			11/13/13

SEAL

I HEREBY CERTIFY THAT THIS PLAN, SPECIFICATION, OR REPORT WAS PREPARED BY ME OR UNDER MY DIRECT SUPERVISION AND THAT I AM A DULY LICENSED PROFESSIONAL ENGINEER UNDER THE LAWS OF THE STATE OF MINNESOTA.

DATE _____ REG. NO. _____

PRIME CONSULTANT

WENCK ASSOCIATES

Responsive partner. Exceptional outcomes.

PROJECT TITLE

ELM CREEK STREAM RESTORATION AND WATER QUALITY IMPROVEMENTS
CITY PROJECT NO. 14006

CITY OF PLYMOUTH

3400 PLYMOUTH BOULEVARD
PLYMOUTH, MN 55447

SHEET TITLE

30+25 TO 14+50
STREAM RESTORATION
PLAN & PROFILE

DWN BY	CHK'D	APP'D	DWG DATE	SCALE
LNJ	EAM	EAM	NOV 2014	AS SHOWN

PROJECT NO.	SHEET NO.	REV NO.
1756-07	C-105	0

M:\1756\07 Elm Creek Design\CAD\Civil\C-104 STREAM PLAN AND PROFILE.dwg

Plot Date & Time: 19 January 2015 1:32 PM

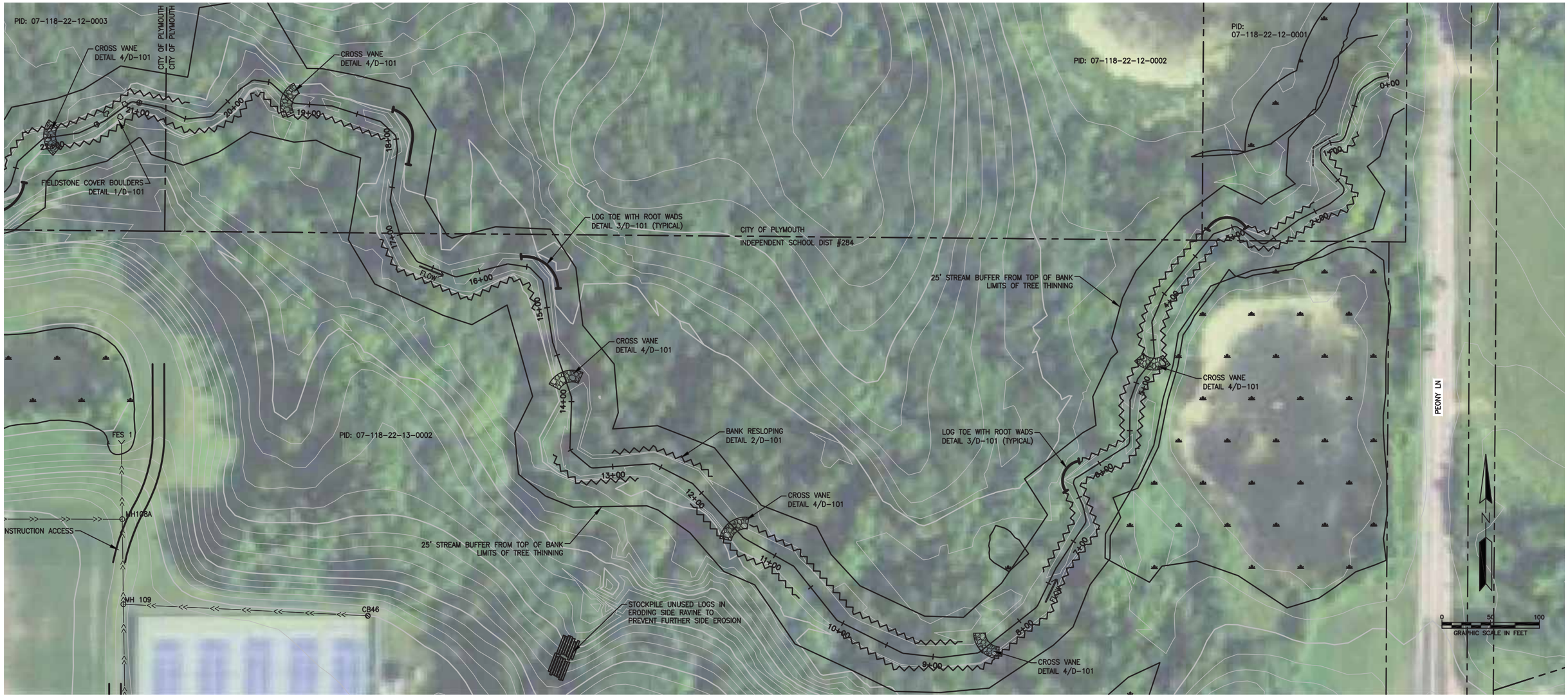

ELM CREEK CENTERLINE PROFILE

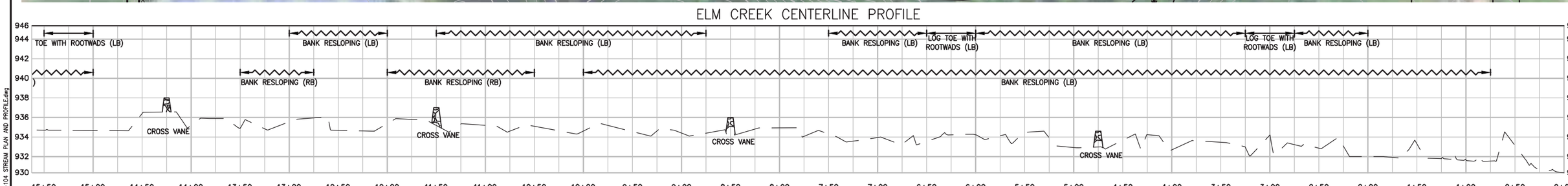

LEGEND

- DELINEATED WETLAND
- BANK RESLOPING
- LOG TOE WITH ROOD WADS
- SHRUB PLANTING
- CBxx CATCH BASIN
- EXISTING STORM SEWER
- PARCEL LINE

NOTES:

1. TREES USED FOR NURSERY LOGS AND SEATING LOGS SHALL BE LIMITED TO STRAIGHT SECTIONS OF MAPLE, ELM, AND BASSWOOD. LOCATIONS OF NURSERY LOGS AND SEATING LOGS SHALL BE AS DIRECTED BY ENGINEER.
2. FLOTATION SILT CURTAIN IS REQUIRED CONTAIN SOIL MATERIAL DURING BANK RESLOPING OPERATIONS. FLOTATION SILT CURTAIN SHALL BE MAINTAINED AND RELOCATED AS OPERATIONS OF BANK RESLOPING PROGRESS. FLOTATION SILT CURTAIN SHALL NOT BE RELOCATED UNTIL CURRENT SITE IS STABILIZED.

REV	REVISION DESCRIPTION	DWN	APP	REV DATE
0	ISSUED FOR REVIEW			11/13/13

SEAL

I HEREBY CERTIFY THAT THIS PLAN, SPECIFICATION, OR REPORT WAS PREPARED BY ME OR UNDER MY DIRECT SUPERVISION AND THAT I AM A DULY LICENSED PROFESSIONAL ENGINEER UNDER THE LAWS OF THE STATE OF MINNESOTA.

DATE _____ REG. NO. _____

PRIME CONSULTANT

WENCK ASSOCIATES

Responsive partner. Exceptional outcomes.

PROJECT TITLE

ELM CREEK STREAM RESTORATION AND WATER QUALITY IMPROVEMENTS
CITY PROJECT NO. 14006

CITY OF PLYMOUTH

3400 PLYMOUTH BOULEVARD
PLYMOUTH, MN 55447

SHEET TITLE

15+50 TO 0+00
STREAM RESTORATION
PLAN & PROFILE

DWN BY	CHK'D	APP'D	DWG DATE	NOV 2014
LNJ	EAM	EAM	SCALE	AS SHOWN

PROJECT NO.	SHEET NO.	REV NO.
1756-07	C-106	0

M:\1756\07 Elm Creek Design\CAD\CIV\C-104 STREAM PLAN AND PROFILE.dwg

Plot Date & Time: 19 January 2015 4:00 PM

LEGEND

- DELINEATED WETLAND
- CBxx CATCH BASIN
- EXISTING STORM SEWER
- PARCEL LINE

DEWATERING NOTE:

1. CONTRACTOR SHOULD ANTICIPATE GROUND WATER. A BID ITEM HAS BEEN PROVIDED FOR DEWATERING AS ALL DEWATERING WORK NECESSARY TO CONSTRUCT THE IRON ENHANCED SAND FILTERS.
2. ENERGY DISSIPATION SHALL BE PROVIDED AT ALL DISCHARGE POINTS TO PREVENT SCOUR.
3. PROVIDE SILT BAGS FOR DEWATERING.

REV	REVISION DESCRIPTION	DWN	APP	REV DATE
0	ISSUED FOR REVIEW			11/13/13

SEAL

I HEREBY CERTIFY THAT THIS PLAN, SPECIFICATION, OR REPORT WAS PREPARED BY ME OR UNDER MY DIRECT SUPERVISION AND THAT I AM A DULY LICENSED PROFESSIONAL ENGINEER UNDER THE LAWS OF THE STATE OF MINNESOTA.

DATE _____ REG. NO. _____

PRIME CONSULTANT

WENCK ASSOCIATES

Responsive partner. Exceptional outcomes.

PROJECT TITLE

ELM CREEK STREAM RESTORATION AND WATER QUALITY IMPROVEMENTS
CITY PROJECT NO. 14006

CITY OF PLYMOUTH

3400 PLYMOUTH BOULEVARD
PLYMOUTH, MN 55447

SHEET TITLE

NURP POND 1
IRON ENHANCED SAND FILTER

DWN BY	CHK'D	APP'D	DWG DATE	SCALE
LNJ	EAM	EAM	NOV 2014	AS SHOWN

PROJECT NO.	SHEET NO.	REV NO.
1756-07	C-107	0

M:\1756\07 Elm Creek Design\CAD\Civil\C-107 IRON ENHANCED FILTERS.dwg

Plot Date & Time: 19 January 2015 4:00 PM

LEGEND

- DELINEATED WETLAND
- CBxx CATCH BASIN
- EXISTING STORM SEWER
- PARCEL LINE

DEWATERING NOTE:

1. CONTRACTOR SHOULD ANTICIPATE GROUND WATER. A BID ITEM HAS BEEN PROVIDED FOR DEWATERING AS ALL DEWATERING WORK NECESSARY TO CONSTRUCT THE IRON ENHANCED SAND FILTERS.
2. ENERGY DISSIPATION SHALL BE PROVIDED AT ALL DISCHARGE POINTS TO PREVENT SCOUR.
3. PROVIDE SILT BAGS FOR DEWATERING.

REV	REVISION DESCRIPTION	DWN	APP	REV DATE
0	ISSUED FOR REVIEW			11/13/13

SEAL

I HEREBY CERTIFY THAT THIS PLAN, SPECIFICATION, OR REPORT WAS PREPARED BY ME OR UNDER MY DIRECT SUPERVISION AND THAT I AM A DULY LICENSED PROFESSIONAL ENGINEER UNDER THE LAWS OF THE STATE OF MINNESOTA.

DATE _____ REG. NO. _____

PRIME CONSULTANT

WENCK ASSOCIATES

Responsive partner. Exceptional outcomes.

PROJECT TITLE

ELM CREEK STREAM RESTORATION AND WATER QUALITY IMPROVEMENTS
CITY PROJECT NO. 14006

CITY OF PLYMOUTH

3400 PLYMOUTH BOULEVARD
PLYMOUTH, MN 55447

SHEET TITLE

NURP POND 2
IRON ENHANCED SAND FILTER

DWN BY	CHK'D	APP'D	DWG DATE	
LNJ	EAM	EAM	NOV 2014	
			SCALE	AS SHOWN
PROJECT NO.	SHEET NO.			REV NO.
1756-07	C-108			0

M:\1756\07 Elm Creek Design\CAD\Civil\C-107 IRON ENHANCED FILTERS.dwg

Plot Date & Time: 19 January 2015 12:09 PM

REV	REVISION DESCRIPTION	DWN	APP	REV DATE
0	ISSUED FOR REVIEW			11/13/13

SEAL

I HEREBY CERTIFY THAT THIS PLAN, SPECIFICATION, OR REPORT WAS PREPARED BY ME OR UNDER MY DIRECT SUPERVISION AND THAT I AM A DULY LICENSED PROFESSIONAL ENGINEER UNDER THE LAWS OF THE STATE OF MINNESOTA.

DATE _____ REG. NO. _____

PRIME CONSULTANT

WENCK ASSOCIATES

Responsive partner. Exceptional outcomes.

PROJECT TITLE

ELM CREEK STREAM RESTORATION AND WATER QUALITY IMPROVEMENTS
CITY PROJECT NO. 14006

CITY OF PLYMOUTH

3400 PLYMOUTH BOULEVARD
PLYMOUTH, MN 55447

SHEET TITLE

SITE ACCESS PLAN

DWN BY	CHK'D	APP'D	DWG DATE	NOV 2014
LNJ	EAM	EAM	SCALE	AS SHOWN

PROJECT NO.	SHEET NO.	REV NO.
1756-07	C-109	0

M:\1756\07 Elm Creek Design\CAD\CIV\C-109 SITE ACCESS.dwg

Plot Date & Time: 20 January 2015 2:30 PM

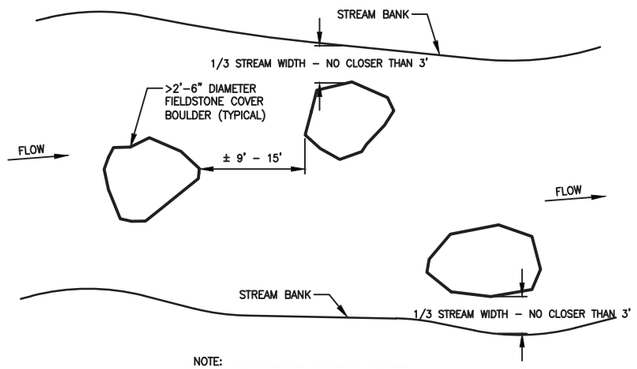

NOTE:
COVER BOULDERS TO BE FIELD LOCATED

COVER BOULDERS
NOT TO SCALE — 1 / D–101

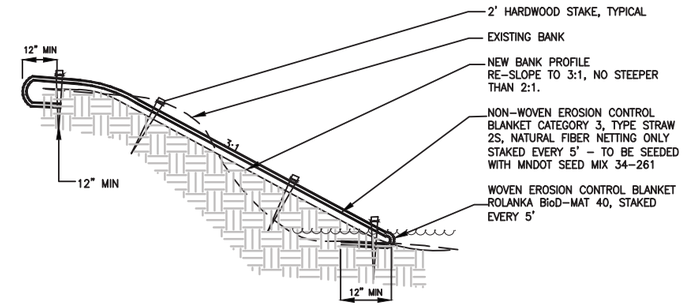

NOTE: PROVIDE FLOTATION SILT CURTAIN TO CONTAIN SOIL MATERIAL DURING BANK RESLOPING OPERATIONS. FLOTATION SILT CURTAIN SHALL BE MAINTAINED AND RELOCATED AS OPERATIONS OF BANK RESLOPING PROGRESS. FLOTATION SILT CURTAIN SHALL NOT BE RELOCATED UNTIL CURRENT SITE IS STABILIZED.

BANK RESLOPING
NOT TO SCALE — 2 / D–101

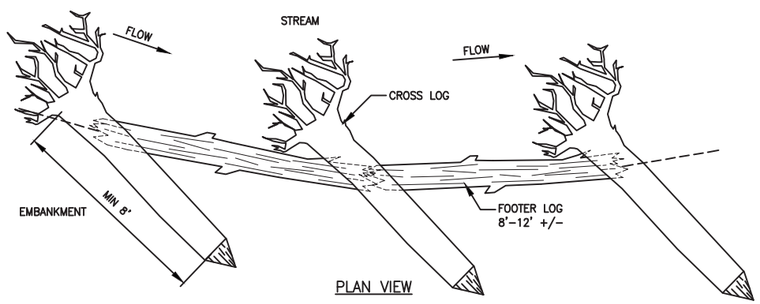

PLAN VIEW

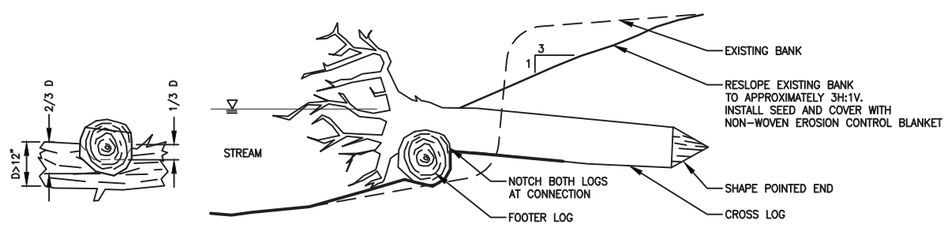

ELEVATION VIEW

SECTION VIEW

NOTE:
1. A MINIMUM OF TWO CROSS LOGS PER FOOTER LOG IS REQUIRED TO ANCHOR FOOTER LOG.
2. NOTCH TOP AND BOTTOM LOGS BY 1/3 D.
3. MINIMUM LOG DIAMETER is 12" +/–

LOG TOE WITH ROOT WADS
NOT TO SCALE — 3 / D–101

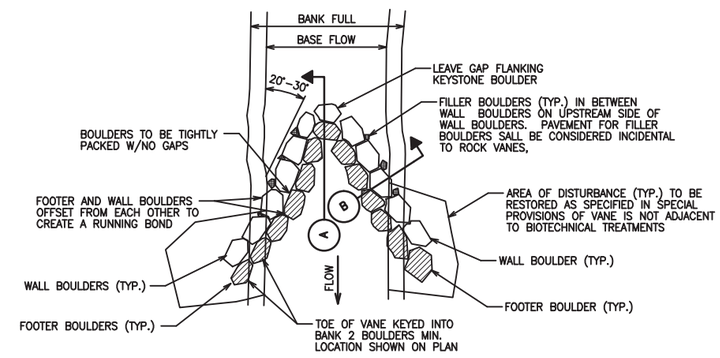

PLAN VIEW

LEGEND

- SUBMERGED OR FOOTER 18" TO 24" FIELDSTONE BOULDER MEETING MnDOT 3601.2A. AT LEAST 20% OF THE BOULDERS SHALL HAVE A DIAMETER OF 24" OR LARGER.
- PROTRUDING OR WALL 24" TO 30" BOULDERS MEETING MnDOT 3601.2A. AT LEAST 20% OF THE BOULDERS SHALL HAVE A DIAMETER OF 30" OR LARGER.
- FILLER BOULDER 6" TO 12" DIA.;

NOTE:
1. FIELD STONE BOULDERS SHALL HAVE NO CUT, BLAST OR SHEAR MARKS.
2. ENOUGH WALL BOULDERS TO BE FLAT TOPPED AND SET TO CREATE A DRY CROSSING/WALKWAY ACROSS THE CREEK.
3. FINAL PLACEMENT OF ROCK VANE AND BOULDERS TO BE FIELD VERIFIED BY ENGINEER.
4. ALL VANES EXTEND UPSTREAM INTO FLOW OF CREEK.
5. CLASS V RIPRAP ACCEPTABLE ROCK ALTERNATIVE

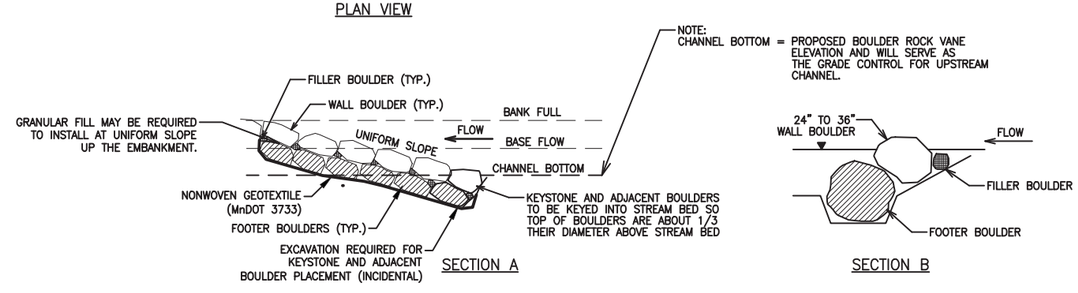

SECTION A

SECTION B

CROSS VANE DETAIL
NOT TO SCALE — 4 / D–101

REV	REVISION DESCRIPTION	DWN	APP	REV DATE
0	ISSUED FOR REVIEW			11/13/13

SEAL

I HEREBY CERTIFY THAT THIS PLAN, SPECIFICATION, OR REPORT WAS PREPARED BY ME OR UNDER MY DIRECT SUPERVISION AND THAT I AM A DULY LICENSED PROFESSIONAL ENGINEER UNDER THE LAWS OF THE STATE OF MINNESOTA.

DATE _____ REG. NO. _____

PRIME CONSULTANT

WENCK ASSOCIATES
Responsive partner. Exceptional outcomes.

PROJECT TITLE
ELM CREEK STREAM RESTORATION AND WATER QUALITY IMPROVEMENTS
CITY PROJECT NO. 14006

CITY OF PLYMOUTH

3400 PLYMOUTH BOULEVARD
PLYMOUTH, MN 55447

SHEET TITLE
DETAILS

DWN BY	CHK'D	APP'D	DWG DATE	NOV 2014
LNJ	EAM	EAM	SCALE	AS SHOWN

PROJECT NO.	SHEET NO.	REV NO.
1756–07	D–101	0

M:\1756\07 Elm Creek Design\CAD\CIV\D–101 DETAILS.dwg

Plot Date & Time: 20 January 2015 2:30 PM

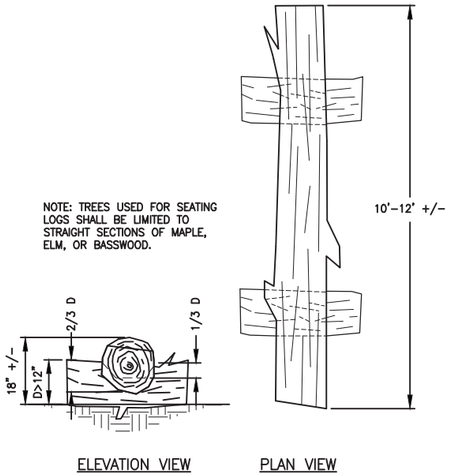

SEATING LOGS
NOT TO SCALE
1 / D-102

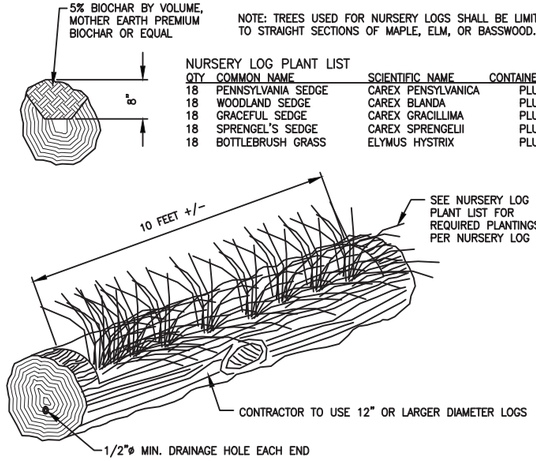

NOTE: TREES USED FOR NURSERY LOGS SHALL BE LIMITED TO STRAIGHT SECTIONS OF MAPLE, ELM, OR BASSWOOD.

NURSERY LOG PLANT LIST

QTY	COMMON NAME	SCIENTIFIC NAME	CONTAINER SIZE
18	PENNSYLVANIA SEDGE	CAREX PENSYLVANICA	PLUG
18	WOODLAND SEDGE	CAREX BLANDA	PLUG
18	GRACEFUL SEDGE	CAREX GRACILLIMA	PLUG
18	SPRENGEL'S SEDGE	CAREX SPRENGELII	PLUG
18	BOTTLEBRUSH GRASS	ELYMUS HYSTRIX	PLUG

NURSERY LOG DETAIL
NOT TO SCALE
2 / D-102

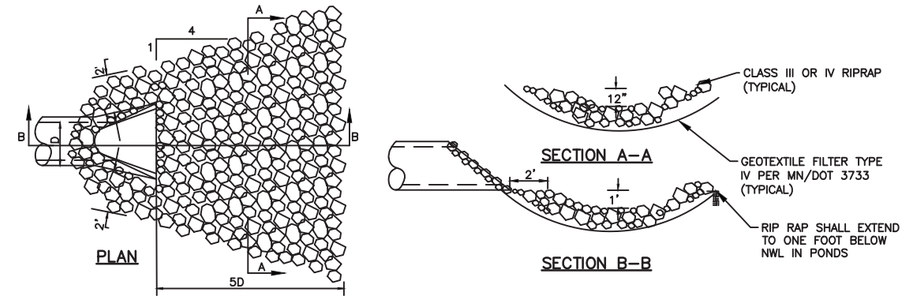

PIPE DIAMETER	RIPRAP
12"-24"	8-12 CY CLASS III
27"-33"	12-20 CY CLASS III
36"-48"	23-38 CY CLASS III
54" AND UP	62 CY CLASS IV

RIPRAP AT FLARED END SECTIONS DETAIL
NOT TO SCALE
3 / D-102

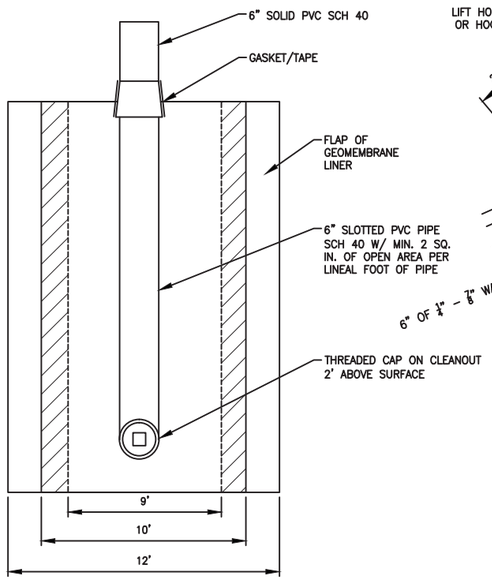

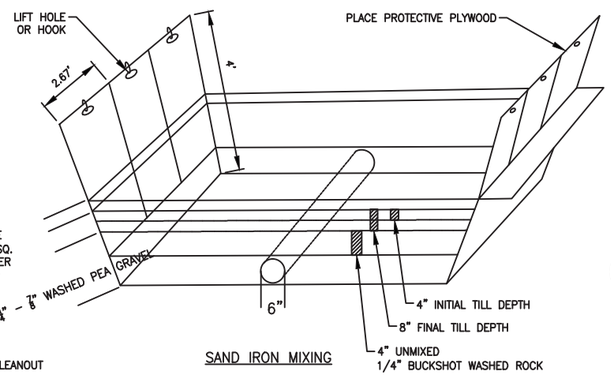

SUGGESTED CONSTRUCTION SEQUENCE

1. DEWATER.
2. GRADE 15' BENCH.
3. EXCAVATE 10' WIDE X 1.5' DEEP BENCH.
4. COMPACT IN-PLACE SUBSOIL.
5. ROLL OUT GEOTEXTILE FABRIC/60 MIL HDPE GEOMEMBRANE LINER.
6. INSTALL 6" DIAMETER SLOTTED/PERFORATED PVC PIPE AND CLEANOUTS.
7. PLACE 1/4" - 7/8" WASHED PEA GRAVEL TO A DEPTH OF 6".
8. PUT TEMPORARY PROTECTIVE PLYWOOD IN PLACE (OR OTHER METHOD APPROVED BY ENGINEER TO PREVENT PUNCTURE OF EPDM).
9. PLACE 1/4" "BUCKSHOT" WASHED ROCK TO A DEPTH OF 4".
10. PLACE FINE FILTER AGGREGATE TO A DEPTH OF 8" (TOP OF BENCH).
11. PLACE 3.7 LBS/SF (PER 8" THICK SECTION) IRON FILINGS [ETI-CC-1004(-8+50) CONNELLY GPM, INC. OR APPROVED EQUAL] ON TOP OF FINE FILTER AGGREGATE.
12. TILL IN IRON FILINGS TO 4" DEPTH USING SMALL GARDEN STYLE TILLER.
13. HAND MIX SIDES NEAR 2.67' X 4' PROTECTIVE PLYWOOD.
14. SET TILLER DEPTH TO 8" AND MIX AGAIN WITH SAME PROCESS.
15. REMOVE PROTECTIVE PLYWOOD AND RAKE SURFACE FLAT. STAKE LINER DOWN EVERY TWO FEET.
16.

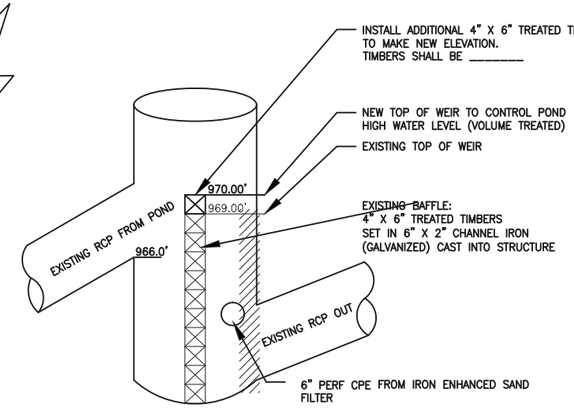

MODIFICATIONS TO NURP POND #2 OUTLET STRUCTURE
NOT TO SCALE
5 / D-102

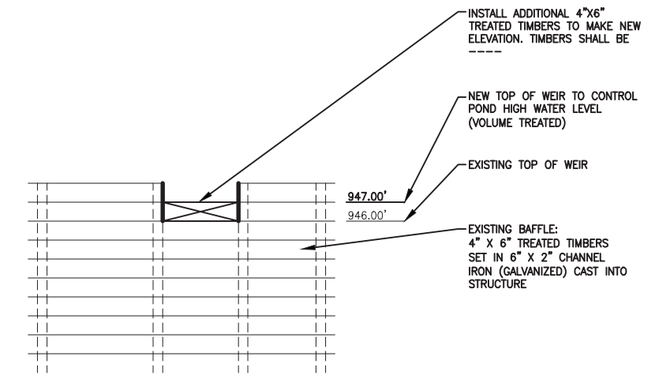

MODIFICATIONS TO NURP POND #1 BAFFLED WEIR OUTLET
NOT TO SCALE
6 / D-102

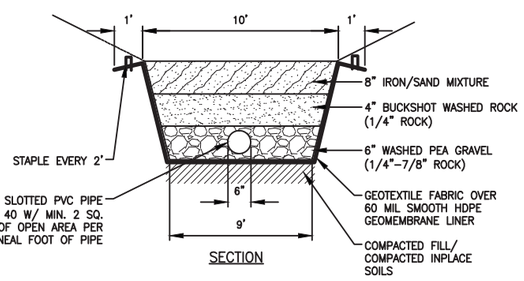

IRON ENHANCED SAND FILTER
NOT TO SCALE
4 / D-102

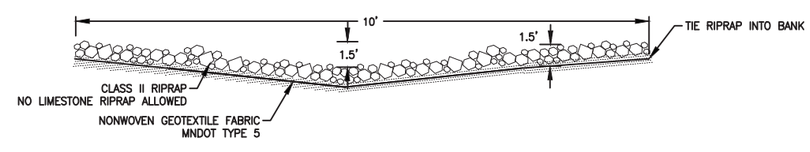

CLASS II RIPRAP SPILLWAY DETAIL
NOT TO SCALE
7 / D-102

REV	REVISION DESCRIPTION	DWN	APP	REV DATE
0	ISSUED FOR REVIEW			11/13/13

SEAL

I HEREBY CERTIFY THAT THIS PLAN, SPECIFICATION, OR REPORT WAS PREPARED BY ME OR UNDER MY DIRECT SUPERVISION AND THAT I AM A DULY LICENSED PROFESSIONAL ENGINEER UNDER THE LAWS OF THE STATE OF MINNESOTA.

DATE _____ REG. NO. _____

PRIME CONSULTANT

WENCK ASSOCIATES

Responsive partner. Exceptional outcomes.

PROJECT TITLE

ELM CREEK STREAM RESTORATION AND WATER QUALITY IMPROVEMENTS
CITY PROJECT NO. 14006

CITY OF PLYMOUTH

3400 PLYMOUTH BOULEVARD
PLYMOUTH, MN 55447

SHEET TITLE

DETAILS

DWN BY	CHK'D	APP'D	DWG DATE	
LNJ	EAM	EAM	NOV 2014	
			SCALE	AS SHOWN

PROJECT NO.	SHEET NO.	REV NO.
1756-07	D-102	0

M:\1756\07 Elm Creek Design\CAD\Civil\D-101 DETAILS.dwg

Plot Date & Time: 16 January 2015 2:30 PM

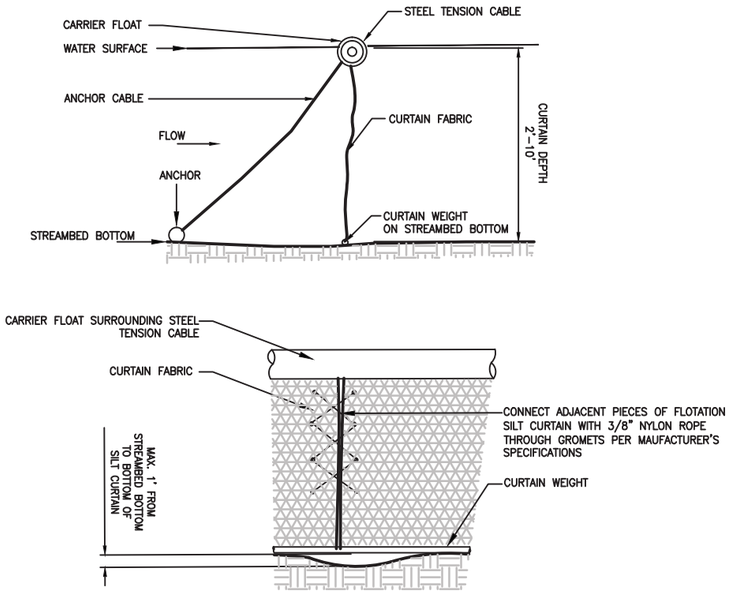

FLOTATION SILT CURTAIN (1 / D-103)
NOT TO SCALE

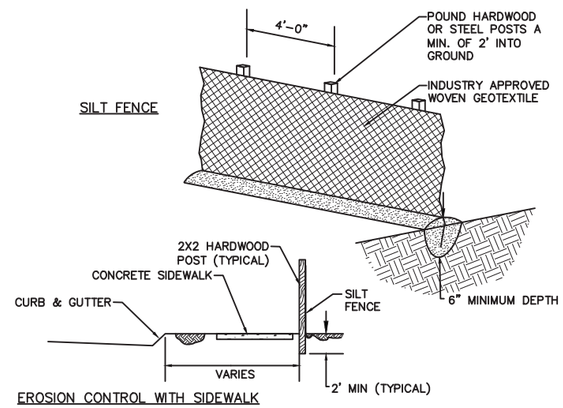

NOTES:

1. INSTALL SILT FENCE PER PLAN SET BEFORE BEGINNING CONSTRUCTION
2. INSTALL SILT FENCE AND EROSION CONTROL BLANKET BEHIND CURB & GUTTER AS SHOWN
3. REPLACE TORN, OVERBURDENED, OR DECOMPOSING SILT FENCE WITHIN 24 HOURS
4. TO JOIN SECTIONS OF SILT FENCE, POSITION POSTS TO OVERLAP. FABRIC SHOULD FOLD AROUND EACH POST ONE FULL TURN

SILT FENCE (2 / D-103)
NOT TO SCALE

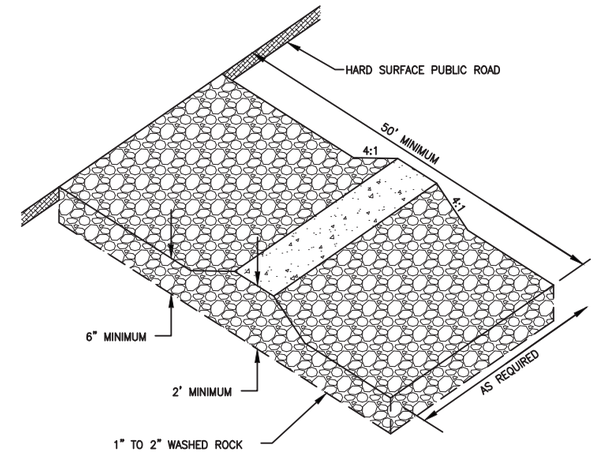

NOTES:

ROCK SIZE SHOULD BE 1" TO 2" IN SIZE SUCH AS MN/DOT CA-1 OR CA-2 COURSE AGGREGATE. (WASHED)

A GEOTEXTILE FABRIC MAY BE USED UNDER THE ROCK TO PREVENT MIGRATION OF THE UNDERLYING SOIL INTO THE STONE.

ROCK ENTRANCE TO CONSTRUCTION SITE (3 / D-103)
NOT TO SCALE

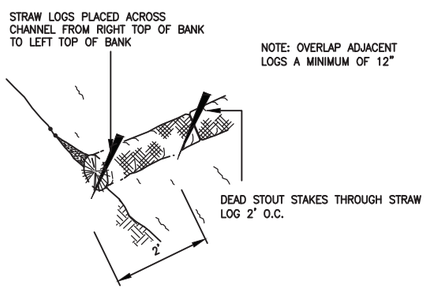

BIOROLL DETAIL (4 / D-103)
NOT TO SCALE

REV	REVISION DESCRIPTION	DWN	APP	REV DATE
0	ISSUED FOR REVIEW			11/13/13

SEAL

I HEREBY CERTIFY THAT THIS PLAN, SPECIFICATION, OR REPORT WAS PREPARED BY ME OR UNDER MY DIRECT SUPERVISION AND THAT I AM A DULY LICENSED PROFESSIONAL ENGINEER UNDER THE LAWS OF THE STATE OF MINNESOTA.

DATE _____ REG. NO. _____

PRIME CONSULTANT

WENCK ASSOCIATES

Responsive partner. Exceptional outcomes.

PROJECT TITLE

ELM CREEK STREAM RESTORATION AND WATER QUALITY IMPROVEMENTS
CITY PROJECT NO. 14006

CITY OF PLYMOUTH

3400 PLYMOUTH BOULEVARD
PLYMOUTH, MN 55447

SHEET TITLE

DETAILS

DWN BY	CHK'D	APP'D	DWG DATE	SCALE
	EAM	EAM	NOV 2014	AS SHOWN

PROJECT NO.	SHEET NO.	REV NO.
1756-07	D-103	0

M:\1756\07 Elm Creek Design\CAD\Dtl\D-101 DETAILS.dwg

Plot Date & Time: 16 January 2015 4:49 PM

EROSION AND SEDIMENT CONTROL PRACTICES
All exposed soil areas must have temporary erosion protection (slash mulch, erosion control blanket, seed) as soon as possible or within 7 days of no longer working the area.

CONTRACTOR shall implement appropriate construction phasing, vegetative buffer strips, horizontal slope grading, and other construction practices that minimize erosion when practical.

The normal wetted perimeter of any temporary or permanent drainage ditch that drains water from a construction site, or diverts water around a site, must be stabilized within 200 lineal feet from the property edge, or from the point of discharge to any surface water. Stabilization must be completed within 24 hours of connecting to a surface water. Pipe outlets must be provided with temporary or permanent energy dissipation within 24 hours of connection to a surface water.

Sediment control practices must minimize sediment from entering surface waters, including curb and gutter systems and storm sewer inlets. The following measures will be taken as sediment control practices in order to minimize sediments from entering surface waters:
1. Installation of sediment control practices including silt curtain and a sedimentation basin on the down gradient perimeter as shown on sheet D-103 prior to land disturbing activities. Silt curtain and sediment basin shall be located as shown on sheet EC-102 to trap sediment from creek discharge.
2. Installation of silt fence and inlet protection around construction staging area perimeters as shown on sheet EC-102 prior to site disturbance.
3. Minimize vehicle tracking with use of rock construction entrances as shown on sheet D-103.
4. Street sweeping of tracked sediment when necessary.

Final Stabilization

All areas disturbed by construction will receive seed and mulch or sod according to the plans and specifications and within the specified vegetative time schedule. Final stabilization will occur when the site has a uniform vegetative cover with a density of 70% over the entire disturbed area. All temporary synthetic erosion prevention and sediment control BMPs (such as silt fence) must be removed as part of the site final stabilization. All sediment must be cleaned out of conveyances and temporary sedimentation basins if applicable.

Notice of Termination (NOT) must be submitted within 30 days of final stabilization.

Record Retention

The SWPPP, all changes to it, and inspection and maintenance records must be kept on-site during construction. The OWNER must retain a copy of the SWPPP along with the following records for three (3) years after submittal of the Notice of Termination.
1. Any other permits required for the project;
2. Records of all inspection and maintenance conducted during construction;
3. All permanent operations and maintenance agreements that have been implemented, including all right of way, contract, covenants and other binding requirements regarding perpetual maintenance; and
4. All required calculations for design of the temporary and permanent stormwater management systems.

Inspections
The inspection log will be completed by the CONTRACTOR for the construction site. Inspections at the site will be completed as follows:
Once every seven (7) days during active construction and,
Within 24 hours after a rainfall event greater than 0.5 inches in 24 hours.

The individual performing inspections must be trained as required by part IV.E of the Permit. CONTRACTOR to provide OWNER with proof of training. Inspections must include stabilized areas, erosion prevention and sediment control BMPs, and infiltration areas. Corrective actions must be identified and date of correction must be noted as identified in Section IV.E. of the Permit.

Impervious Surface
Proposed added impervious surface - 0 acres

Total Area Disturbed by Construction - 11 acres

Construction Dates: June 2015 - August 2015

Party Responsible for Long Term Operation and Maintenance of the Site - OWNER
City of Plymouth, MN
3400 Plymouth Blvd.
Plymouth, MN 55447

Party Responsible for Implementation of the SWPPP - CONTRACTOR (TBD)

Pollution Prevention Measures
Solid Waste
Solid waste, including but not limited to, collected asphalt and concrete millings, floating debris, paper, plastic, fabric, construction and demolition debris and other waste must be disposed of properly and must comply with MPCA disposal requirements.

Hazardous Materials
Hazardous materials, including but not limited to oil, gasoline, paint and any hazardous substance must be properly stored including secondary containments, to prevent spills, leaks or other discharge. Restricted access to storage areas must be provided to prevent vandalism. Storage and disposal of hazardous waste must be in compliance with MCPA regulations.

Washing of Construction Vehicles
External washing of trucks and other construction vehicles must be limited to a defined area of the site. Runoff must be contained and waste properly disposed of. No engine degreasing is allowed on site.

Concrete Washout Area
The contractor shall use means to washout concrete offsite.

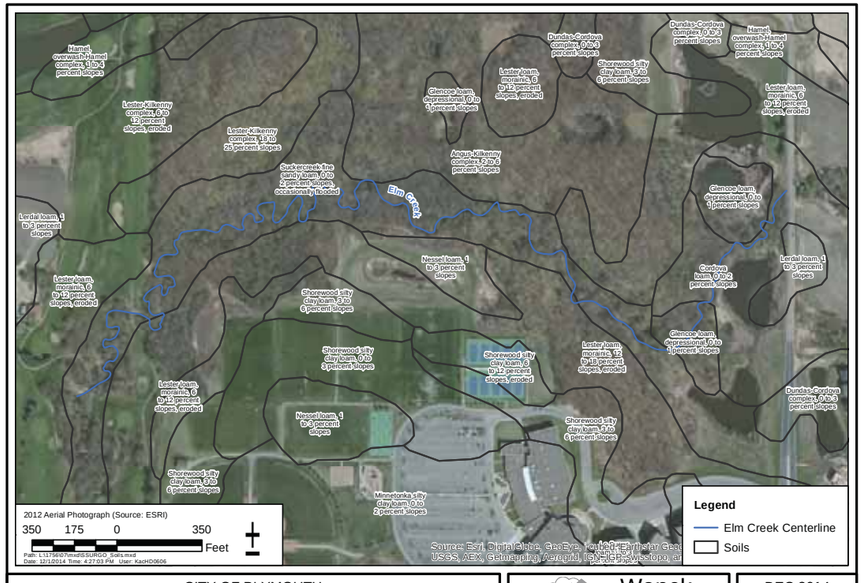

CITY OF PLYMOUTH
SSURGO Soils
Wenck — Engineers - Scientists, Business Professionals, www.wenck.com — 1800 Pioneer Creek Center, Maple Plain, MN 55359-0429, 1-800-472-2232
DEC 2014
Figure 3

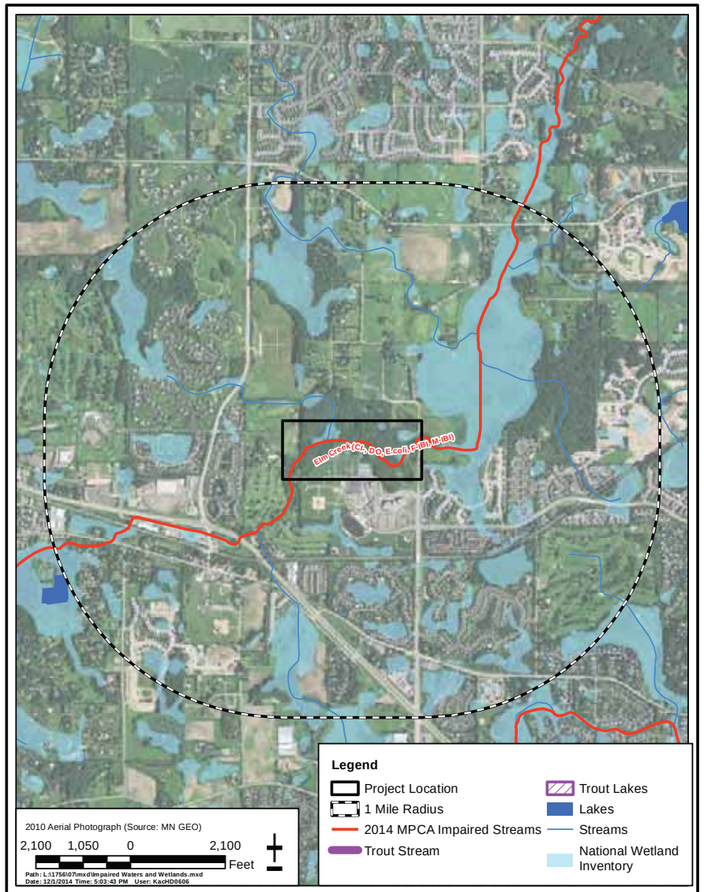

CITY OF PLYMOUTH
303(d) Impaired Waters and Wetlands Map
Wenck — Engineers - Scientists, Business Professionals, www.wenck.com — 1800 Pioneer Creek Center, Maple Plain, MN 55359-0429, 1-800-472-2232
DEC 2014
Figure 4

IMPAIRED WATERS, SPECIAL WATERS, AND WETLANDS
This Project is not located within 1 mile of a special water.

This Project is located within 1 mile of an impaired waters (Figure 4 this sheet):
Elm Creek impaired for Cl-, DO, E. coli, F-IBI, M-IBI.
Because of the proximity of the project to an impaired water during construction:
1. All exposed soil areas must be stabilized as soon as possible to limit soil erosion but in no case later than 7 days after the construction activity in that portion of the site has temporarily or permanently ceased.
2. Temporary sediment basins are required to handle runoff for common drainage locations that serve an area with 5 or more acres disturbed at one time.

This Project will not disturb wetlands.

GENERAL SWPPP NOTES
- Dewatering is not anticipated for this project.
- CONTRACTOR shall implement construction phasing to limit disturbed areas to less than 5 acres at one time. Site is unfeasible for properly sized temporary sediment basins required for handling runoff from areas with 5 or more disturbed acres.

CERTIFICATION
In accordance with Part III.A.2 of the General Permit Authorization to Discharge Stormwater Associated with Construction Activity under the NPDES, the preparer of this document was trained under the University of Minnesota Erosion and Sediment Control Certification Program. Mr. Louis Sigtermans' certification in Design of SWPPP is valid through May 31, 2017.

UNIVERSITY OF MINNESOTA
Louis H Sigtermans
Saint Paul, MN
Design of Construction SWPPP (May 31, 2017)

REV	REVISION DESCRIPTION	DWN	APP	REV DATE
0	ISSUED FOR REVIEW			11/13/13

SEAL
I HEREBY CERTIFY THAT THIS PLAN, SPECIFICATION, OR REPORT WAS PREPARED BY ME OR UNDER MY DIRECT SUPERVISION AND THAT I AM A DULY LICENSED PROFESSIONAL ENGINEER UNDER THE LAWS OF THE STATE OF MINNESOTA.
DATE _____ REG. NO. _____

PRIME CONSULTANT
WENCK ASSOCIATES
Responsive partner. Exceptional outcomes.

PROJECT TITLE
ELM CREEK STREAM RESTORATION AND WATER QUALITY IMPROVEMENTS
CITY PROJECT NO. 14006
CITY OF PLYMOUTH
3400 PLYMOUTH BOULEVARD
PLYMOUTH, MN 55447

SHEET TITLE
SWPPP

DWN BY	CHK'D	APP'D	DWG DATE	SCALE
	EAM	EAM	NOV 2014	AS SHOWN

PROJECT NO.	SHEET NO.	REV NO.
1756-07	EC-101	0

M:\1756\07 Elm Creek Design\CAD\DWG\EC-101 SWPPP.dwg

Plot Date & Time: 20 January 2015 4:49 PM

EROSION CONTROL NOTES:

1. ADDITIONAL EROSION CONTROL MEASURES MAY BE REQUIRED DEPENDING ON SITE CONDITIONS DURING CONSTRUCTION. COORDINATE WITH ENGINEER.
2. SEE EC-101 FOR TEMPORARY STABILIZATION REQUIREMENTS.
3. RESTORE DISTURBED AREAS AS INDICATED ON SHEETS C-104 TO C-106.
4. MAINTENANCE FOR BIOROLLS WILL REQUIRE SHIFTING BIOROLLS SWAY FROM ACCESS ROAD IN USE PRIOR TO STARTING WORK EACH DAY AND SHIFTING THEM BACK OVER ACCESS ROAD AFTER OPERATION HAVE CONCLUDED EACH DAY.

REV	REVISION DESCRIPTION	DWN	APP	REV DATE
0	ISSUED FOR REVIEW			11/13/13

SEAL

I HEREBY CERTIFY THAT THIS PLAN, SPECIFICATION, OR REPORT WAS PREPARED BY ME OR UNDER MY DIRECT SUPERVISION AND THAT I AM A DULY LICENSED PROFESSIONAL ENGINEER UNDER THE LAWS OF THE STATE OF MINNESOTA.

DATE _____ REG. NO. _____

PRIME CONSULTANT

WENCK ASSOCIATES

Responsive partner. Exceptional outcomes.

PROJECT TITLE

ELM CREEK STREAM RESTORATION AND WATER QUALITY IMPROVEMENTS
CITY PROJECT NO. 14006

CITY OF PLYMOUTH

3400 PLYMOUTH BOULEVARD
PLYMOUTH, MN 55447

SHEET TITLE

EROSION CONTROL PLAN

DWN BY	CHK'D	APP'D	DWG DATE	NOV 2014
LNJ	EAM	EAM	SCALE	AS SHOWN

PROJECT NO.	SHEET NO.	REV NO.
1756-07	EC-102	0

M:\1756\07 Elm Creek Design\CAD\C3\EC-102.dwg