Information for File # 2013-00252-JTF

Applicant	**Canadian National Railroad**
Corps Contact	Josh Fitzpatrick
Address	1554 Highway 2, Suite 2, Two Harbors, MN 55616
E-Mail	joshua.t.fitzpatrick@usace.army.mil
Phone	(651) 290-5694
Primary County	Carlton County
Sec/Township/Range:	SW ¼, Sec. 14, T. 49N., R. 16W**.**
Information Complete On	**March 5, 2013**
Posting Expires On	**March 14, 2013**
Authorization Type	LOP-05-MN

This application is being reviewed in accordance with the practices for documenting Corps jurisdiction under Sections 9 & 10 of the Rivers and Harbor Act of 1899 and Section 404 of the Clean Water Act identified in Regulatory Guidance Letter 07-01. We have made a preliminary determination that the aquatic resources that would be impacted by the proposed project are regulated by the Corps of Engineers under Section 404 of the Clean Water Act. Our jurisdictional review and final jurisdictional determination could result in modifications to the scope of the project's regulated waterbody/wetland impacts and compensatory mitigation requirements identified above. An approved jurisdictional determination will be made prior to reaching a permit decision, and will be posted on the St. Paul District web page at http://www.mvp.usace.army.mil/.

PROJECT PURPOSE & NEED: Canadian National Railroad plans to replace their existing bridge 13.10 structure over the Midway River, a trout bearing stream. The existing bridge has been determined to be in a poor condition and has reached the end of its useful life.

PROJECT DESCRIPTION:
The project would rebuild the existing approaches, install new abutments, replace the existing timber substructure with steel and convert the deck to a ballast deck. Minor excavation would occur and slope stabilization around the proposed bents would be required to ensure adequate flow is maintained through the crossing.

Installation of a temporary causeway would be initiated at the site. The causeway would be used to replace the bridge. Temporary H-piles would be driven and a temporary deck

would be placed with a top deck elevation 7-feet lower than that of the existing bridge deck. Upon completion of the temporary causeway old piles would be cut off at grade to make room for new H-piles to be located inside the existing bridge bent system. Pile caps would be poured in place. Upon completion of the new bridge substructure, the existing bridge would be taken out of service and removed. Installation of the precast abutment walls and new deck would complete the major portion of the work and the track would then be put back into service.

For site access, there is a public crossing located at East Harney Road (south of bridge) and County Highway 2 (north of bridge). The site would be accessed by the rail track and the access grade on the south side of the existing track within the railroad right of way (ROW). The access road would follow the railroad toe through the wetland to the Midway River on the southeast side of the railroad. The access road would consist of a geo-fabric underlayer beneath clean aggregate and/or timber mats. Equipment for excavation and the backfill for compaction would be brought in via the access route. A crane would be used to install and remove the structures described. Materials would be stored within the ROW.

All materials used for the access road and temporary bridge shall be completely removed from the site upon completion of the project. Affected areas would be restored to preconstruction conditions.

NAME, AREA AND TYPES OF WATERS (INCLUDING WETLANDS) SUBJECT TO LOSS: There would be a temporary discharge of dredged and fill material into 1,500 square feet of fresh meadow (Type 1A) wetlands for the construction of a temporary access road, and a permanent discharge of fill material into 400 square feet on the bed of the Midway River for installation of riprap to stabilize the bridge piers.

ALTERNATIVES CONSIDERED: The no-build alternative was dismissed since the rail line needs to be maintained.

A culvert option was initially investigated as a possible option to replace the existing bridge. A culvert arrangement provides the railroad with considerably less maintenance requirements. A hydraulic study was completed for the existing bridge and it became immediately clear that the amount of flow volume transmitted under the existing bridge could not be adequately accommodated by a culvert. This option was discarded.

A partial bridge replacement was considered which was to center around a bridge superstructure replacement. This option was discarded due to the current Canadian National Railroad design standards and the spacing of the existing bents in combination with the weight requirement of the newer style concrete deck beams used.

COMPENSATORY MITIGATION: Compensatory mitigation is not required for this project.

DRAWINGS: See attached.

PROJECT LOCATION

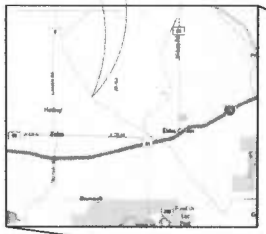

VICINITY MAP – SITE DETAIL

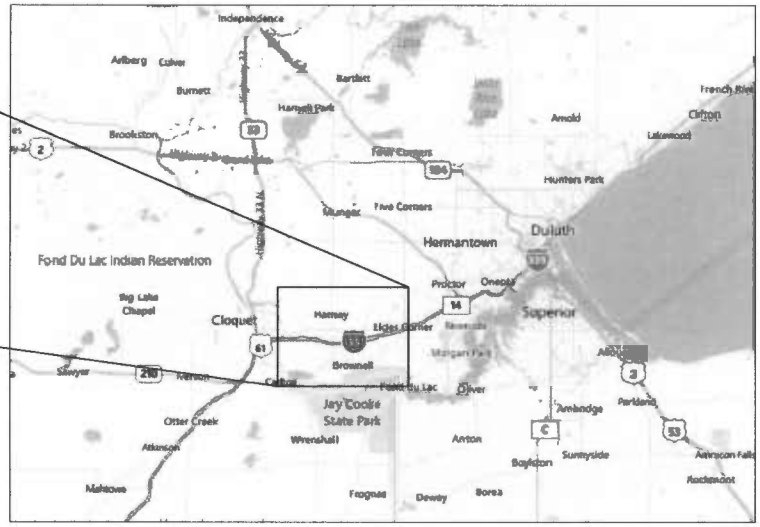

VICINITY MAP – REGIONAL DETAIL

INDEX OF SHEETS

AA1401-13.10-02.01	COVER
AA1401-13.10-02.02	PLAN, CROSS SECTIONS, & BRIDGE DETAILS
AA1401-13.10-02.03	PROFILE
AA1401-13.10-02.04	BASE OF RAIL PLAN & PROFILE, AND BRIDGE DETAILS

Canadian National

OFFICE OF CHIEF ENGINEER

DIVISION: NORTH, SUBDIVISION: RAINY
BRIDGE: 13.10
NEAR HARNEY, MINNESOTA, USA

UPEA ENGINEERS & ARCHITECTS

ENGINEERING
ARCHITECTURE
PLANNING
SURVEYING
ENVIRONMENTAL

100 PORTAGE STREET
HOUGHTON, MI 49931
(906) 482-4610

102 W. WASHINGTON, SUITE 217
MARQUETTE, MI 49855
(906) 228-8081

2905 N. STEPHENSON AVE., SUITE 2
IRON MOUNTAIN, MI 49801
(906) 563-8407

707 ABRAM STREET
SAULT STE. MARIE, MI 49783
(906) 635-4011

1701 DUNLAP AVE, SUITE B
MARINETTE, WI 54143
(715) 732-1188

PROJECT TITLE:
RAINY BRIDGE 13.10

OWNER:
CANADIAN NATIONAL RAILROAD

PROJECT LOCATION:
CARLTON COUNTY, MINNESOTA

ISSUED FOR:	DATE:
FINAL	11/29/11
PRELIMINARY	10/14/11

PROJECT NO:	WBS-11435
DESIGNED BY:	J.J.W.
DRAWN BY:	L.G.H.
CHECKED:	J.J.W.
APPROVED:	J.J.W.

COVER

AA1401-13.10-02.01

© U.P. Engineers & Architects, Inc.

2013-00252-JTF
Drawing 1 of 11

REVIEWER PLEASE NOTE:
PLEASE REFER TO PHOTOGRAPHS IN THIS REPORT AT:
*** ATTACHMENTS – SITE PHOTOGRAPHS
FOR TYPICAL ELEVATIONS OF ABUTMENT AND BENTS

NOTES:
BRIDGE 19 SPANS, 285 FT LONG AND 40 FT HIGH, TIMBER BENTS, TIMBER STRINGERS EXCEPT OVER RIVER STEEL GIRDER.

3 FT WIDE TIMBER WALKWAY ON BOTH SIDES OF BRIDGE, 3.5 FT HIGH TIMBER HANDRAIL

8"W x 8"H TIMBER TIES EXCEPT OVER STEEL GIRDERS 8"W x 11½"H TIMBER TIES, 14" SPACING OVER GIRDER, 16"–22" SPACING OFF THE BRIDGE.

¾"–1" DAPPING ON TIES OVER GIRDER

1" DAPPING ON TIMBER STRINGERS SOUTH OF STEEL GIRDERS

WELDED RAIL 115 lb/yd
0.50" HIGH

7½" x 12" x ¾" TIE PLATES
NO SHIMS VISIBLE UNDER TIE PLATES

NO PHYSICAL RIGHT-OF-WAY BOUNDARY LOCATED. 200' R.O.W. FROM ON MAP (ASSUMED 100' EACH SIDE OF CENTERLINE)

¾" TO 1' OF WATER BELOW BRIDGE
0.5 FT/SEC, FLOWS WEST

SITE DATUM NAVD88 FROM NGS BENCHMARK HN0332 = 1163.51 FEET

GENERAL NOTES:
–ALL DIMENSIONS AND ELEVATIONS ARE IN FEET
– BENCHMARK : #1:SW CORNER OF BRIDGE TOP OF 5/8" REBAR EL.= 1197.43' #2:NE CORNER OF BRIDGE TOP OF 3/8" REBAR EL.= 1197.32'
–WOOD TIES ON BRIDGES AND APPROACHES
–ALIGNMENT: CURVE OVER BRIDGE, SPIRAL AND CURVE TO SOUTH OF BRIDGE
–GENERAL CONDITIONS: WOODED–BRIDGE OVER MIDWAY RIVER
–ACCESS FROM SOUTH. INTERSECTION OF HARNEY ROAD AND RAIL APPROXIMATELY 1500 FT SOUTH OF BRIDGE 13.10
–SURVEY CONDUCTED SEPTEMBER 26, 2011
–BASE OF RAIL ON BRIDGE CALCULATED BY SUBTRACTING THE HEIGHT OF THE RAIL FROM THE TOP OF RAIL ELEVATION
–ESTIMATED BALLAST DEPTH = 12"–14"

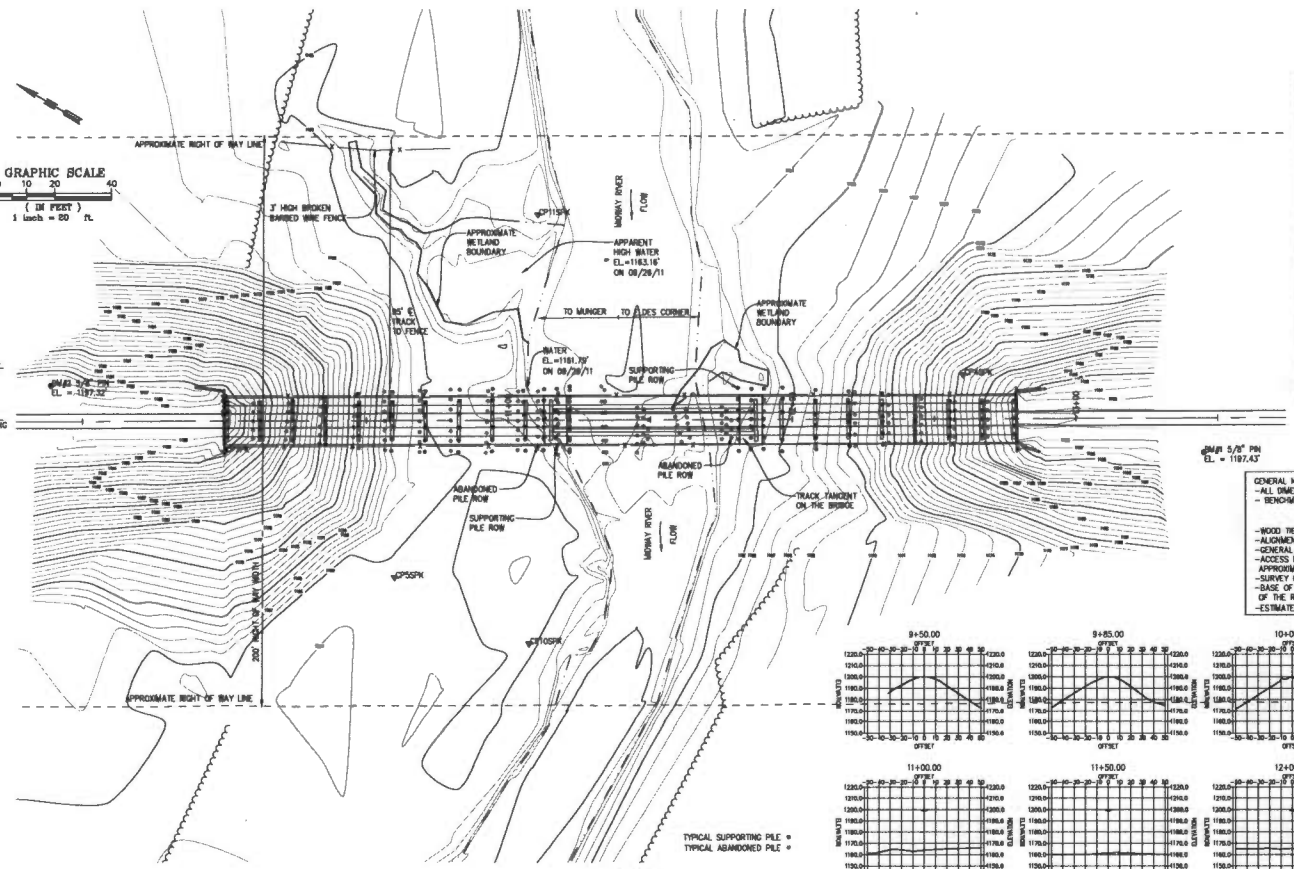

B3 PLAN
SCALE: 1" = 20'

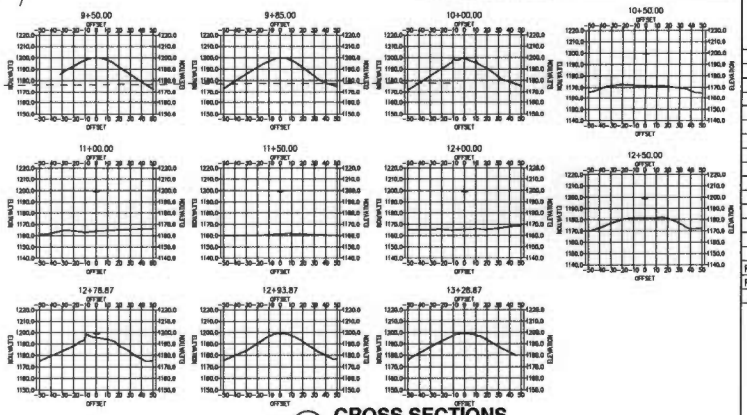

A4 CROSS SECTIONS
SCALE: 1" = 50'

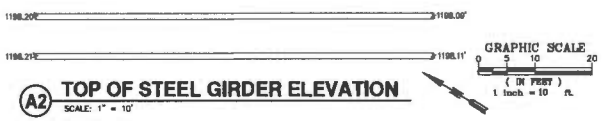

A2 TOP OF STEEL GIRDER ELEVATION
SCALE: 1" = 10'

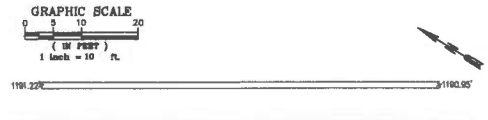

A1 BOTTOM OF STEEL GIRDER ELEVATION
SCALE: 1" = 10'

BRIDGE ELEVATIONS

LOCATION OF SHOT	BENT #1	BENT #2	BENT #3	BENT #4	BENT #5	BENT #6	BENT #7	BENT #8	BENT #9	BENT #10	BENT #11 PONY BENT	OVER CENTER OF GIRDER	BENT #12 PONY BENT	BENT #13	BENT #14	BENT #15	BENT #16	BENT #17	BENT #18	BENT #19	BENT #20
EAST TOP OF RAIL	1200.07	1200.02	1200.00	1199.96	1199.92	1199.89	1199.86	1199.79	1199.74	1199.71	1199.71	1199.69	1199.60	1199.57	1199.56	1199.53	1199.52	1199.50	1199.51	1199.53	1199.52
EAST BASE OF RAIL	1199.57	1199.52	1199.50	1199.46	1199.42	1199.39	1199.36	1199.29	1199.24	1199.21	1199.21	1199.19	1199.10	1199.07	1199.06	1199.03	1199.02	1199.00	1199.01	1199.03	1199.02
EAST TOP OF TIE	1199.48	1199.45	1199.39	1199.43	1199.35	1199.33	1199.25	1199.17	1199.21	1199.12	1199.08	1199.09	1199.00	1199.01	1198.96	1198.94	1198.97	1198.89	1198.98	1198.97	1198.90
EAST TOP OF PILECAP	1196.59	1196.60	1196.60	1196.57	1196.52	1196.52	1196.39	1196.45	1196.30	1196.36	1196.35	N/A	1198.14	1196.22	1196.18	1196.17	1196.15	1196.12	1196.06	1196.02	1196.06
WEST TOP OF RAIL	1200.10	1200.06	1200.02	1199.97	1199.92	1199.89	1199.84	1199.82	1199.78	1199.71	1199.71	1199.67	1199.61	1199.54	1199.54	1199.52	1199.54	1199.53	1199.52	1199.53	1199.53
WEST BASE OF RAIL	1199.60	1199.56	1199.52	1199.47	1199.42	1199.39	1199.34	1199.32	1199.26	1199.21	1199.21	1199.17	1199.11	1199.04	1199.04	1199.02	1199.04	1199.03	1199.02	1199.03	1199.03
WEST TOP OF TIE	1199.50	1199.53	1199.42	1199.42	1199.34	1199.31	1199.21	1199.19	1199.13	1199.09	1199.07	1199.09	1199.04	1198.97	1198.89	1198.95	1199.00	1198.92	1199.01	1198.97	1198.94
WEST TOP OF PILECAP	1196.59	1196.55	1196.56	1196.52	1196.53	1196.46	1196.43	1196.36	1196.41	1196.42	1196.54	N/A	1196.20	1196.18	1196.18	1196.18	1196.13	1196.12	1196.08	1196.02	1196.12
EAST LOW TIMBER EL. BETWEEN BENTS	1196.60	1196.60	1196.59	1196.55	1196.52	1196.46	1196.42	1196.38	1196.33	1196.36	N/A	N/A	1196.10	1196.12	1196.10	1196.08	1196.06	1196.06	1"		
WEST LOW TIMBER EL. BETWEEN BENTS	1196.57	1196.56	1196.54	1196.53	1196.50	1196.45	1196.40	1196.39	1196.42	1196.38	N/A	N/A	1196.11	1196.10	1196.09	1196.07	1196.05	1			

UPEA ENGINEERS & ARCHITECTS

ENGINEERING
ARCHITECTURE
PLANNING
SURVEYING
ENVIRONMENTAL

100 PORTAGE STREET
HOUGHTON, MI 49931
(906) 482-4810

102 W. WASHINGTON, SUITE 217
MARQUETTE, MI 49855
(906) 228-6081

2904 N. STEPHENSON AVE. SUITE 2
IRON MOUNTAIN, MI 49801
(906) 563-5407

707 ASHMUN STREET
SAULT STE. MARIE, MI 49783
(906) 635-0511

1701 DUNLAP AVE. SUITE B
MARINETTE, WI 54143
(715) 732-4188

PROJECT TITLE:
RAINY BRIDGE 13.10

OWNER:
CANADIAN NATIONAL RAILROAD

PROJECT LOCATION:
CARLTON COUNTY, MINNESOTA

FINAL	11/29/11
PRELIMINARY	10/14/11
ISSUED FOR:	DATE:

PROJECT NO:	W69-11435
DESIGNED BY:	J.J.W.
DRAWN BY:	L.G.H.
CHECKED:	J.J.W.
APPROVED:	J.J.W.

PLAN, CROSS SECTIONS & BRIDGE DETAILS

2013-00252-JTF
Drawing 2 of 11

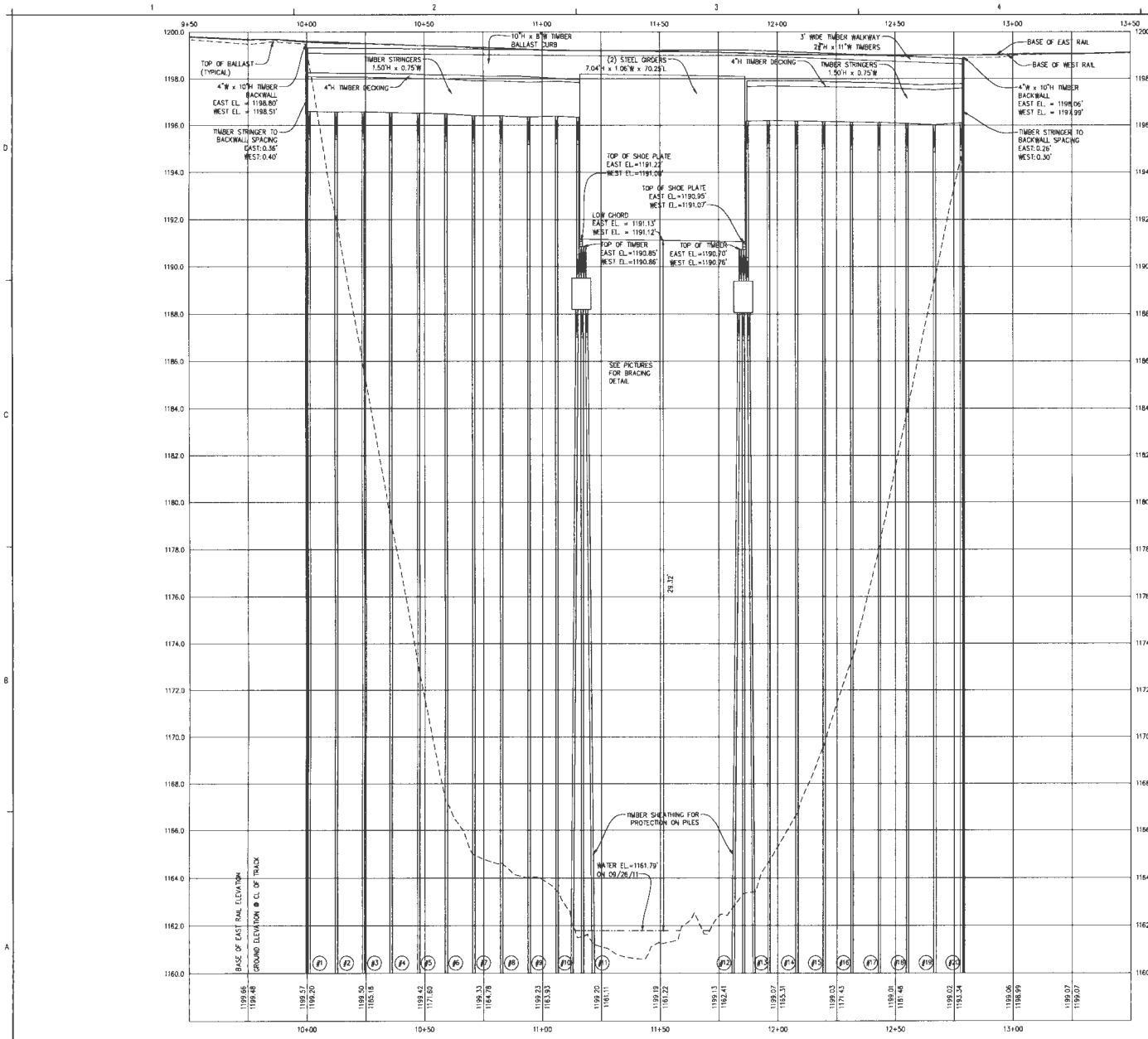

A3 **PROFILE**
SCALE: HORIZONTAL: 1" = 20'
VERTICAL: 1" = 2'

REVIEWER PLEASE NOTE:
PLEASE REFER TO PHOTOGRAPHS IN THIS REPORT AT:
*** ATTACHMENTS - SITE PHOTOGRAPHS
FOR TYPICAL ELEVATIONS OF ABUTMENT AND BENTS

NOTES:
BRIDGE 19 SPANS, 285 FT LONG AND 40 FT HIGH, TIMBER BENTS, TIMBER STRINGERS EXCEPT OVER RIVER STEEL GIRDER.

3 FT WIDE TIMBER WALKWAY ON BOTH SIDES OF BRIDGE, 3.5 FT HIGH TIMBER HANDRAIL

9"W x 9"H TIMBER TIES EXCEPT OVER STEEL GIRDERS 8"W x 11½"H TIMBER TIES. 14" SPACING OVER GIRDER. 18"-22" SPACING OFF THE BRIDGE.

⅜"-1" DAPPING ON TIES OVER GIRDER

1" DAPPING ON TIMBER STRINGERS SOUTH OF STEEL GIRDERS

WELDED RAIL 115 lb/yd
0.50" HIGH

7½" x 12" x ⅜" TIE PLATES
NO SHIMS VISIBLE UNDER TIE PLATES

NO PHYSICAL RIGHT-OF-WAY BOUNDARY LOCATED. 200' R.O.W. FROM ON MAP (ASSUMED 100' EACH SIDE OF CENTERLINE)

½ TO 1' OF WATER BELOW BRIDGE
0.5 FT/SEC, FLOWS WEST

SITE DATUM NAVD88 FROM NGS BENCHMARK RN0332 = 1165.51 FEET

GENERAL NOTES:
- ALL DIMENSIONS AND ELEVATIONS ARE IN FEET
- BENCHMARK : #1: SW CORNER OF BRIDGE TOP OF 5/8" REBAR EL.= 1197.43' #2: NE CORNER OF BRIDGE TOP OF 5/8" REBAR EL.= 1197.32'
- WOOD TIES ON BRIDGES AND APPROACHES
- ALIGNMENT: CURVE OVER BRIDGE, SPIRAL AND CURVE TO SOUTH OF BRIDGE
- GENERAL CONDITIONS: WOODED-BRIDGE OVER MIDWAY RIVER
- ACCESS FROM SOUTH, INTERSECTION OF HARNEY ROAD AND RAIL APPROXIMATELY 1500 FT SOUTH OF BRIDGE 13.10
- SURVEY CONDUCTED SEPTEMBER 26, 2011
- BASE OF RAIL ON BRIDGE CALCULATED BY SUBTRACTING THE HEIGHT OF THE RAIL FROM THE TOP OF RAIL ELEVATION
- ESTIMATED BALLAST DEPTH = 12"-14"

UPEA ENGINEERS & ARCHITECTS

ENGINEERING
ARCHITECTURE
PLANNING
SURVEYING
ENVIRONMENTAL

100 PORTAGE STREET
HOUGHTON, MI 49931
(906) 482-4410

102 W. WASHINGTON, SUITE 217
MARQUETTE, MI 49855
(906) 228-0061

2906 N. STEPHENSON AVE., SUITE 2
IRON MOUNTAIN, MI 49801
(906) 563-5407

707 ASHMUN STREET
SAULT STE. MARIE, MI 49783
(906) 635-0511

1701 DUNLAP AVE, SUITE B
MARINETTE, WI 54143
(715) 732-4188

PROJECT TITLE:
RAINY BRIDGE 13.10

OWNER:
CANADIAN NATIONAL RAILROAD

PROJECT LOCATION:
CARLTON COUNTY, MINNESOTA

ISSUED FOR:	DATE:
FINAL	11/29/11
PRELIMINARY	10/15/11

PROJECT NO:	W69-11435
DESIGNED BY:	J.J.W.
DRAWN BY:	L.G.H.
CHECKED:	J.J.W.
APPROVED:	J.J.W.

PROFILE

AA1401-13.10-02.03

© U.P. Engineers & Architects, Inc.

2013-00252-JTF
Drawing 3 of 11

REVIEWER PLEASE NOTE:
PLEASE REFER TO PHOTOGRAPHS IN THIS REPORT AT:
<<< ATTACHMENTS – SITE PHOTOGRAPHS
FOR TYPICAL ELEVATIONS OF ABUTMENT AND BENTS

NOTES:
BRIDGE 19 SPANS, 285 FT LONG AND 40 FT HIGH, TIMBER BENTS, TIMBER STRINGERS EXCEPT OVER RIVER STEEL GIRDER.

3 FT WIDE TIMBER WALKWAY ON BOTH SIDES OF BRIDGE, 3.5 FT HIGH TIMBER HANDRAIL

8"W x 8"H TIMBER TIES EXCEPT OVER STEEL GIRDERS 8"W x 11½"H TIMBER TIES. 14" SPACING OVER GIRDER. 18"–22" SPACING OFF THE BRIDGE.

⅜"–1" DAPPING ON TIES OVER GIRDER

1" DAPPING ON TIMBER STRINGERS SOUTH OF STEEL GIRDERS

WELDED RAIL 115 lb/yd
0.50' HIGH

7½" x 12" x ⅞" TIE PLATES
NO SHIMS VISIBLE UNDER TIE PLATES

NO PHYSICAL RIGHT-OF-WAY BOUNDARY LOCATED. 200' R.O.W. FROM CN MAP (ASSUMED 100' EACH SIDE OF CENTERLINE)

⅞ TO 1' OF WATER BELOW BRIDGE
0.5 FT/SEC. FLOWS WEST

SITE DATUM NAVD88 FROM NGS BENCHMARK RN0332 = 1165.51 FEET

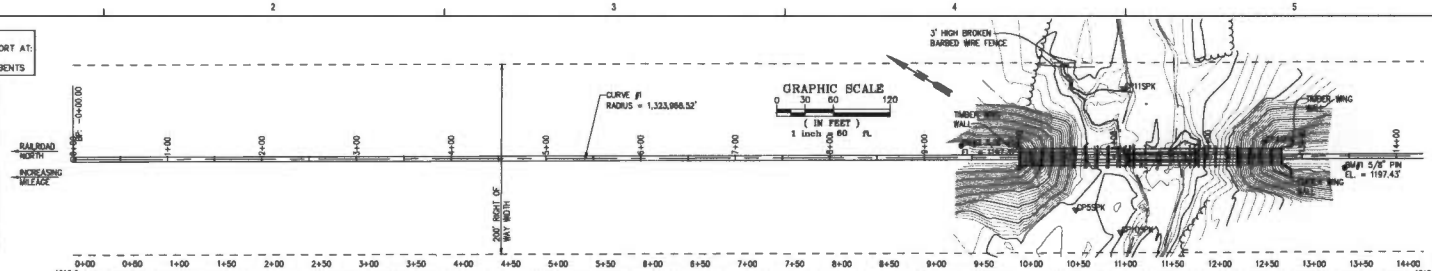

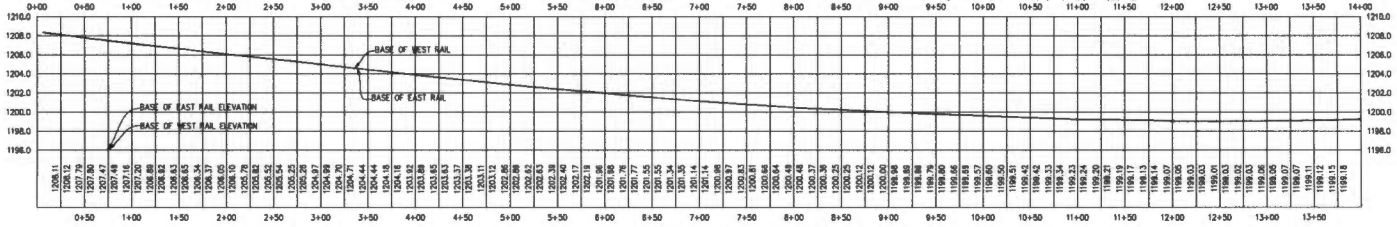

ELEVATION VIEW
SCALE: HORIZONTAL: 1"=60'
VERTICAL: 1"=6'

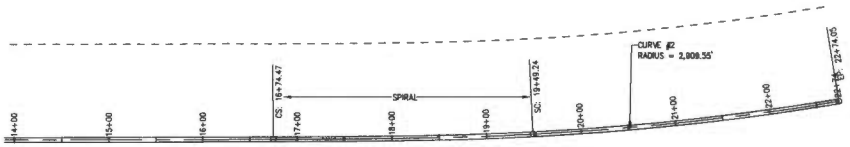

GRAPHIC SCALE
0 30 60 120
(IN FEET)
1 inch = 60 ft.

GENERAL NOTES:
- ALL DIMENSIONS AND ELEVATIONS ARE IN FEET
- BENCHMARK : #1: SW CORNER OF BRIDGE TOP OF 5/8" REBAR EL.= 1197.43' #2: NE CORNER OF BRIDGE TOP OF 5/8" REBAR EL.= 1197.32'
- WOOD TIES ON BRIDGES AND APPROACHES
- ALIGNMENT: CURVE OVER BRIDGE, SPIRAL AND CURVE TO SOUTH OF BRIDGE
- GENERAL CONDITIONS: WOODED-BRIDGE OVER MIDWAY RIVER
- ACCESS FROM SOUTH, INTERSECTION OF HARNEY ROAD AND RAIL APPROXIMATELY 1500 FT SOUTH OF BRIDGE 13.10
- SURVEY CONDUCTED SEPTEMBER 26, 2011
- BASE OF RAIL ON BRIDGE CALCULATED BY SUBTRACTING THE HEIGHT OF THE RAIL FROM THE TOP OF RAIL ELEVATION
- ESTIMATED BALLAST DEPTH = 12"–14"

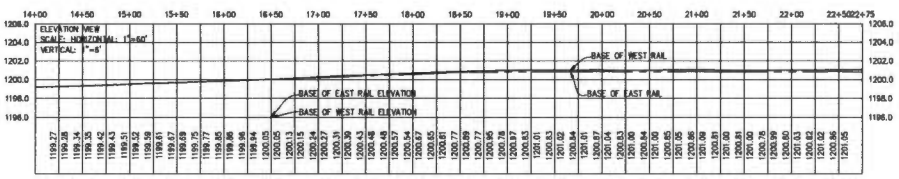

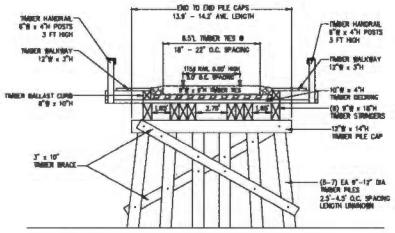

B4 TYPICAL BENT DETAIL
SCALE: 1" = 5'

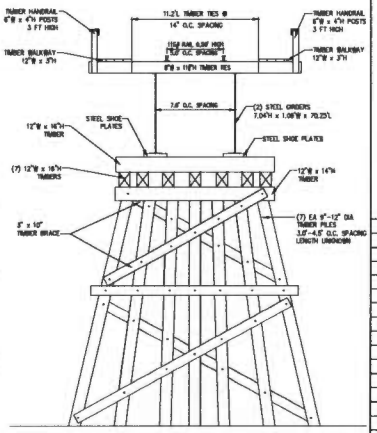

B5 BENT DETAIL UNDER GIRDER
SCALE: 1" = 5'

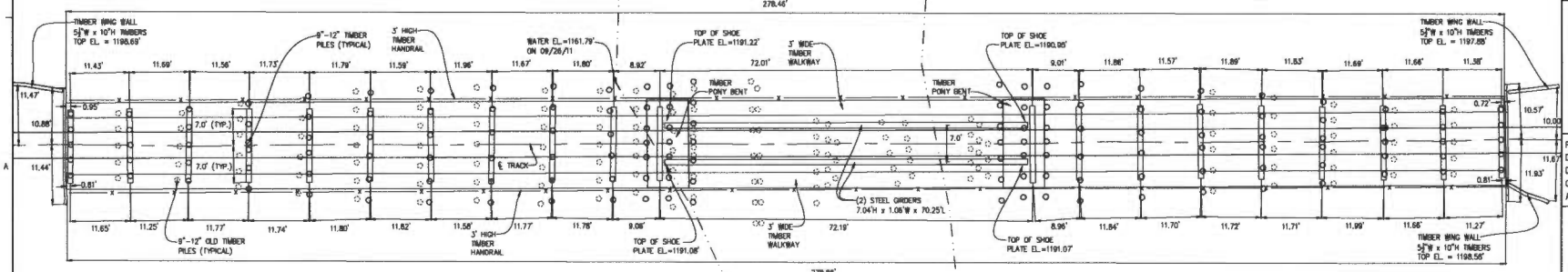

A3 BRIDGE 13.10 PLAN DETAIL
SCALE: 1" = 5'

UPEA ENGINEERS & ARCHITECTS

ENGINEERING
ARCHITECTURE
PLANNING
SURVEYING
ENVIRONMENTAL

100 PORTAGE STREET
HOUGHTON, MI 49931
(906) 482-4810

102 W. WASHINGTON, SUITE 217
MARQUETTE, MI 49855
(906) 228-8081

2908 N. STEPHENSON AVE. SUITE 2
IRON MOUNTAIN, MI 49801
(906) 863-9407

707 ASHMUN STREET
SAULT STE. MARIE, MI 49783
(906) 630-4011

1701 DUNLEAP AVE. SUITE B
MARINETTE, WI 54143
(715) 732-4169

PROJECT TITLE:
RAINY BRIDGE 13.10

OWNER:
CANADIAN NATIONAL RAILROAD

PROJECT LOCATION:
CARLTON COUNTY, MINNESOTA

FINAL	11/29/11
PRELIMINARY	10/15/11
ISSUED FOR:	DATE:

PROJECT NO:	W69-11435
DESIGNED BY:	J.J.W.
DRAWN BY:	L.G.H.
CHECKED:	J.J.W.
APPROVED:	J.J.W.

BASE OF RAIL PLAN & PROFILE, & BRIDGE DETAILS

AA1401-13.10-02.04

© U.P. Engineers & Architects, Inc.

2013-00252-JTF
Drawing 4 of 11

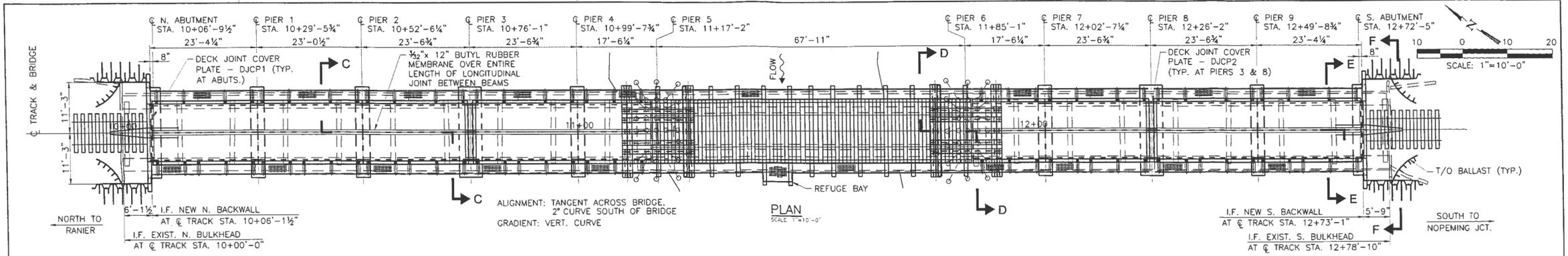

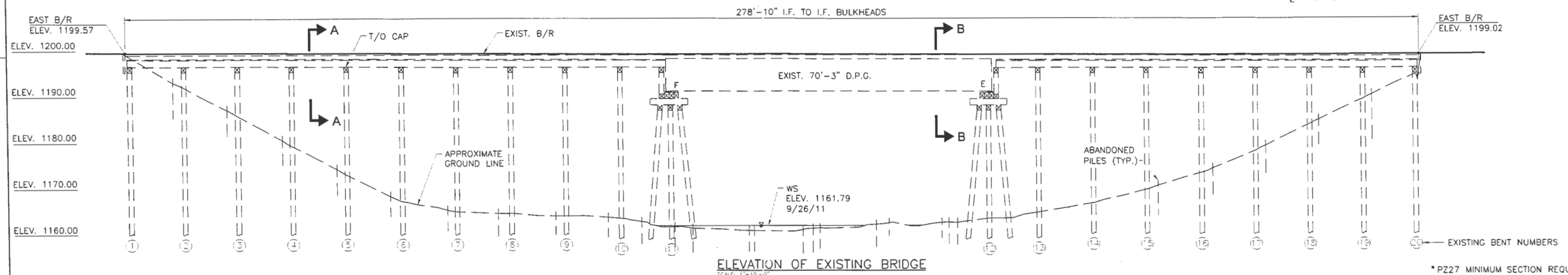

ELEVATION OF EXISTING BRIDGE
SCALE: 1"=10'-0"

* PZ27 MINIMUM SECTION REQUIRED. 25' MIN. SHEET LENGTH DRIVEN FLUSH WITH TOP OF BACKWALL

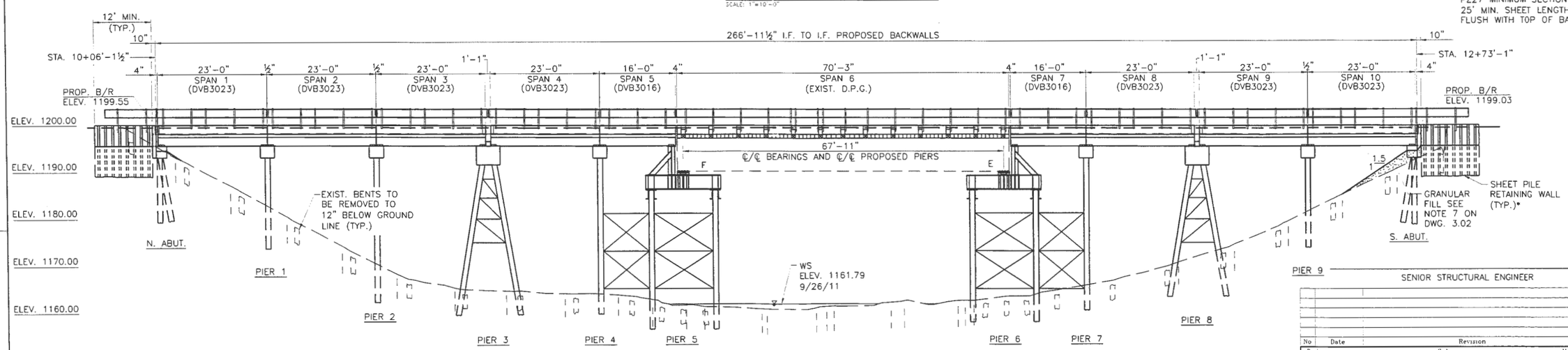

ELEVATION OF PROPOSED BRIDGE
SCALE: 1"=10'-0"

SEE DRAWING 3.02 FOR GENERAL NOTES

SENIOR STRUCTURAL ENGINEER

No	Date	Revision	By/Par

Division	NORTH	Sub-division	RAINY	Mile Mille	13.10

BRIDGE 13.10
NEAR: HARNEY, MN
BRIDGE REPLACEMENT GENERAL LAYOUT

Drawn Dessin	dwh	Designed Conception	ab	Checked Verification		Scale Echelle	AS NOTED	Date	2012/04/18

Office of Chief Engineer
Bureau de l'Ingenieur en chef
CN

File Reference	13.10 RAINY	Drawing Number Dessin Numero	AA1401-13.10-3.01

PRELIMINARY
APRIL 18, 2012

1088.00

2013-00252-JTF
Drawing 5 of 11

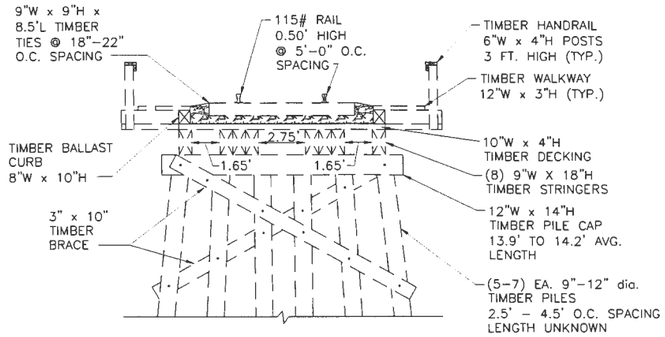

SECTION A–A

SCALE ¼"=1'–0

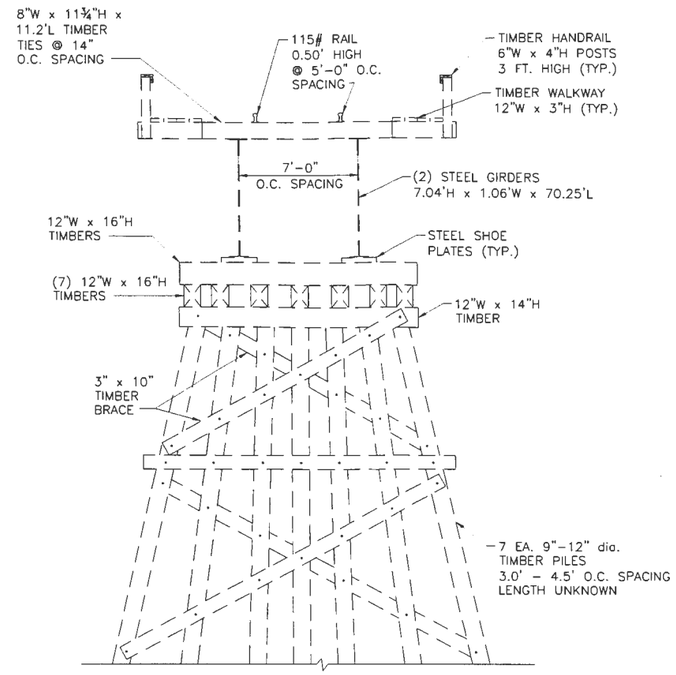

SECTION B–B

SCALE ¼"=1'–0

NOTES

1. THE EXISTING TIMBER TRESTLE APPROACH SPANS AND BENTS SHALL BE REPLACED WITH PRESTRESSED PRECAST DOUBLE VOIDED BOX GIRDERS SUPPORTED ON NEW PRE–CAST CONCRETE PIER CAPS AND ABUTMENT CAPS ON PILES. THE EXIST. D.P.G. SHALL REMAIN AND WILL BE SUPPORTED ON NEW STEEL PIERS.
2. HORIZONTAL AND VERTICAL ALIGNMENT OF TRACK WILL REMAIN UNCHANGED.
3. ALL DIMENSIONS TO BE VERIFIED IN THE FIELD AND LOCATION OF EXISTING ABANDONED PILES ARE TO BE CONFIRMED.
4. DESIGN LIVE LOAD: COOPER E90, IMPACT = $225/\sqrt{L}$
5. MATERIAL SPECIFICATIONS:

DESIGN AND WORKMANSHIP:	AREMA (2011) CHAPTERS 7, 8 & 15 WITH CN MODIFICATIONS AS APPLICABLE
CONCRETE:	ACI117, ACI211, ACI301, ACI304, ACI305
REINFORCING STEEL:	ASTM A615, GRADE 60
WELDING:	AWS D1.5
STRUCTURAL STEEL:	ASTM A572, GRADE 50. MEMBERS INDICATED AS FRACTURE CRITICAL MEMBERS (FCM) MUST MEET ZONE 2 REQUIREMENTS
H.S. BOLTS:	ASTM A325, ⅞" dia. WITH HEAVY HEX NUT AND HARDENED ROUND WASHER U.N.O. ALL BOLTS SHALL BE TIGHTENED BY USING THE TURN OF NUT METHOD.
HOLES:	15/16" dia. U.N.O. HOLES SHALL BE DRILLED OR SUB–PUNCHED AND REAMED
GALVANIZING:	HOT–DIP GALVANIZED IN ACCORDANCE WITH ASTM A123
PAINTING:	BEAMS AND COMPONENTS (EXCEPT PILES) FOR PIERS 5 AND 6 ARE TO RECEIVE ONE SHOP COAT OF CARBOZINC 859, ZINC RICH EPOXY PRIMER. BLAST CLEAN BEFORE PAINTING. SEE PAINTING SPECIFICATION.

6. A 3/32"x12" MIN. WIDTH BUTYL RUBBER MEMBRANE STRIP, WITH 4" WIDE ADHESIVE BACKING FROM EDGE, SHALL BE INSTALLED OVER THE ENTIRE LENGTH OF THE LONGITUDINAL JOINT BETWEEN CONCRETE BOX GIRDERS. MEMBRANE TO CONFORM TO CHAMFER SURFACES, NOT STRETCHED ACROSS CHAMFERS (WHICH WOULD CAUSE UNWANTED PUNCTURING). MEMBRANE THAT CONFORMS TO THE CHAMFERED SURFACES WILL NOT HAVE ADHESIVE (THE CENTER 4") TO ALLOW FOR MOVEMENT.
7. BACKFILL AROUND ABUTMENTS AND WINGWALLS SHALL CONSIST OF FREE DRAINING GRANULAR MATERIAL, COMPACTED TO 95% STANDARD PROCTOR MAXIMUM DENSITY, AND SHALL BE PLACED AND COMPACTED IN LIFTS NOT EXCEEDING 12".
8. CONSTRUCTION: THE EXISTING BALLAST DECK ON THE TIMBER APPROACHES IS TO BE BOXED OUT AS REQUIRED TO FACILITATE STEEL H–PILE DRIVING.
9. REFERENCES:
   - FIELD SURVEY BY U.P. ENGINEERS AND ARCHITECTS, INC. NOV., 2011, PROJECT NO. W69–11435
   - GEOTECHNICAL INVESTIGATION BY GOLDER ASSOCIATES INC., DEC., 2011, PROJECT NO. 113–81065
10. BENCHMARK NO. 1: SW CORNER OF BRIDGE, TOP OF ⅝" dia. REBAR, ELEV. 1197.43.
11. BENCHMARK NO. 2: NE CORNER OF BRIDGE, TOP OF ⅝" dia. REBAR, ELEV. 1197.32.
12. NEAREST STATION: NOPEMING JUNCTION, RAINY SUBDIVISION, MILE POST 10.7.
13. THIS DRAWING SHOULD BE READ IN CONJUNCTION WITH DWG. 3.01.
14. EXPANDED POLYSTYRENE (EPS) GEOFOAM (EPS–46) OR SIMILAR TO BE USED BENEATH ABUTMENT CAPS, APPROXIMATELY 1 FT. DEPTH.

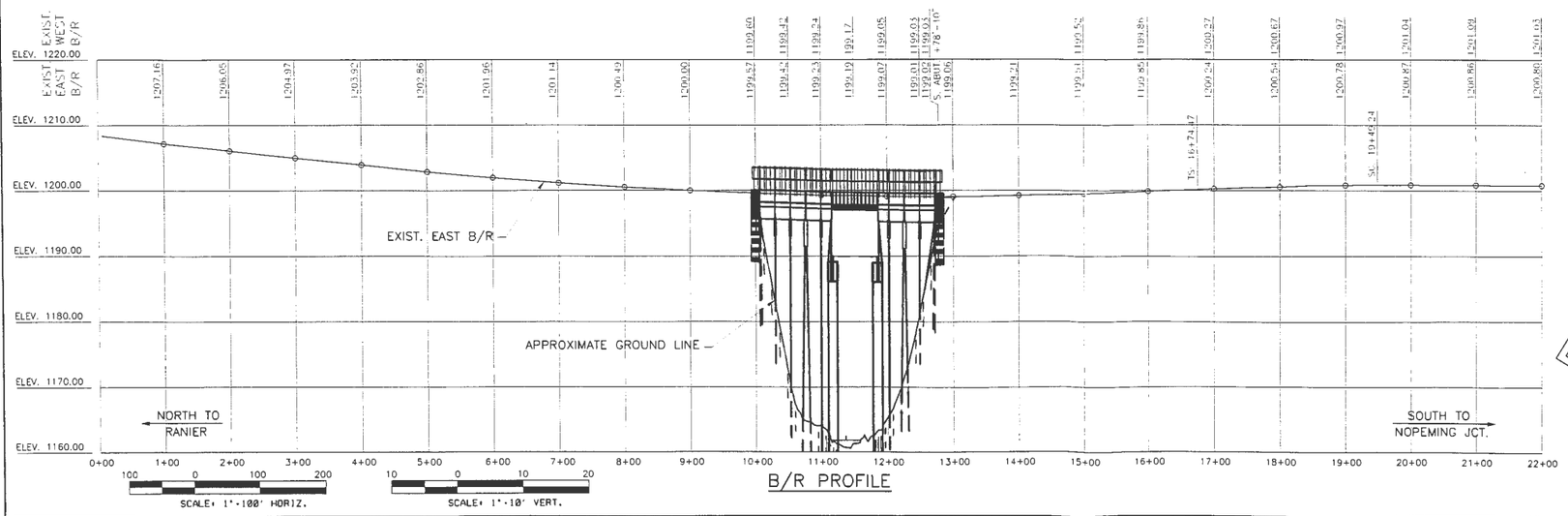

B/R PROFILE

2013-00252-JTF
Drawing 6 of 11

PRELIMINARY
APRIL 18, 2012

SENIOR STRUCTURAL ENGINEER

No.	Date	Revision	By Par

Division	NORTH	Sub-division	RAINY	Mile Mille	13.10

BRIDGE 13.10
NEAR: HARNEY, MN
BRIDGE REPLACEMENT
B/R PROFILE AND TYPICAL SECTIONS

Drawn Dessin	dwh	Designed Conception	ab	Checked Verification		Scale Echelle	AS NOTED	Date 2012/04/18

Office of Chief Engineer
Bureau de l'Ingenieur en chef

CN

File Reference	13.10 RAINY	Drawing Number Dessin Numero	AA1401-13.10-3.02

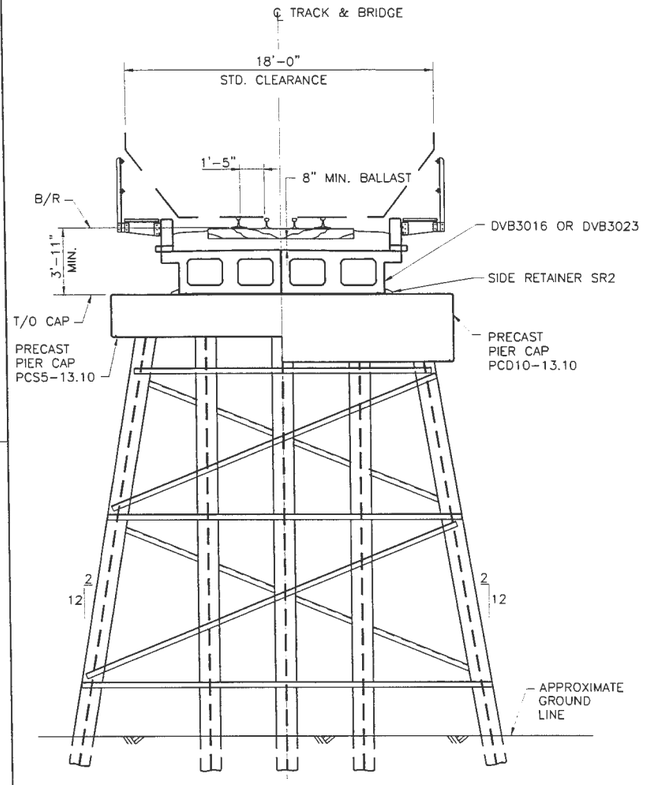

SECTION C-C

SCALE 1/4"=1'-0"

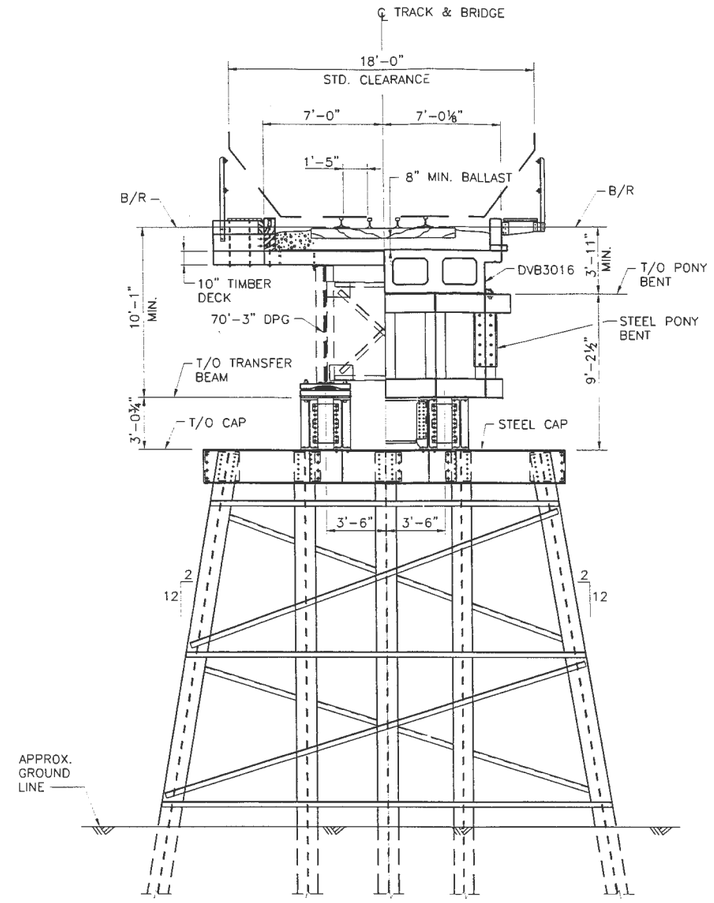

SECTION D-D

SCALE 1/4"=1'-0"

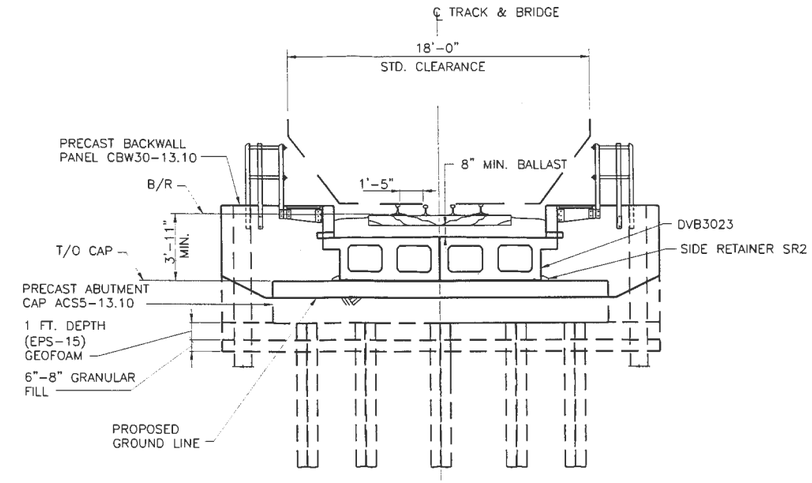

SECTION E-E

SCALE 1/4"=1'-0"

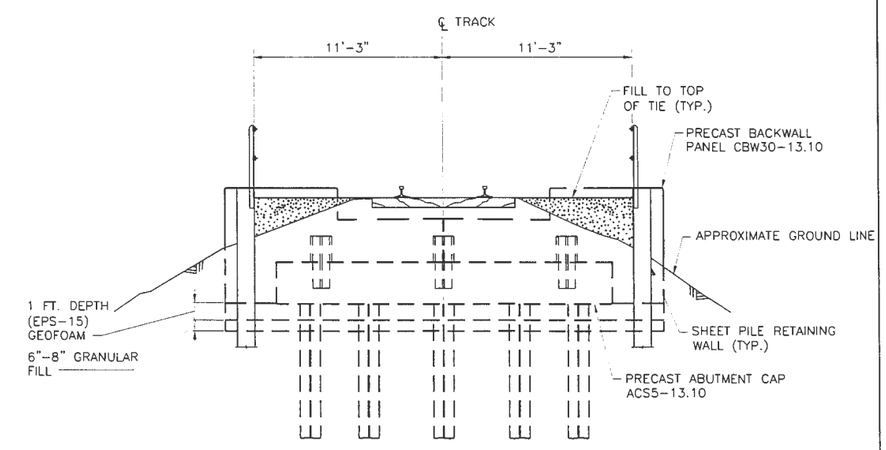

SECTION F-F

SCALE 1/4"=1'-0"

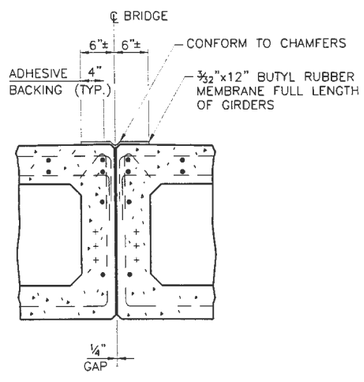

SECTION THRU DVB GIRDERS

SCALE 1"=1'-0"

PRELIMINARY
APRIL 18, 2012

SENIOR STRUCTURAL ENGINEER

No	Date	Revision	By Par

Division	NORTH	Sub-division	RAINY	Mile Mille	13.10

BRIDGE 13.10
NEAR: HARNEY, MN
BRIDGE REPLACEMENT
TYPICAL SECTIONS

Drawn Dessin	dwh	Designed Conception	ab	Checked Verification		Scale Echelle	AS NOTED	Date	2012/04/18

Office of Chief Engineer
Bureau de l'Ingenieur en chef

CN

1088.00

File Reference	13.10 RAINY	Drawing Number Dessin Numero	AA1401-13.10-3.03

2013-00252-JTF
Drawing 7 of 11

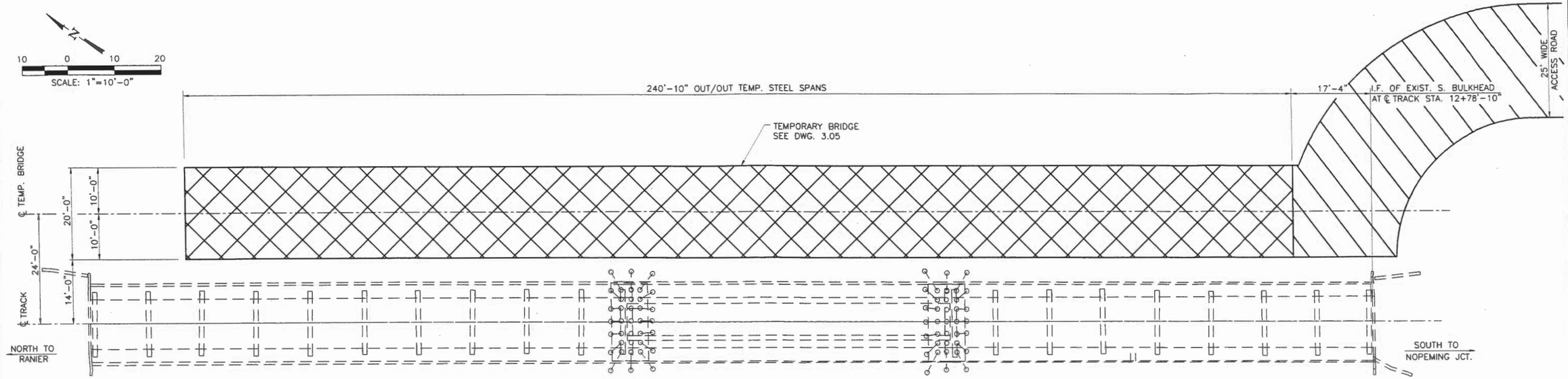

PLAN
SCALE: 1"=10'-0"

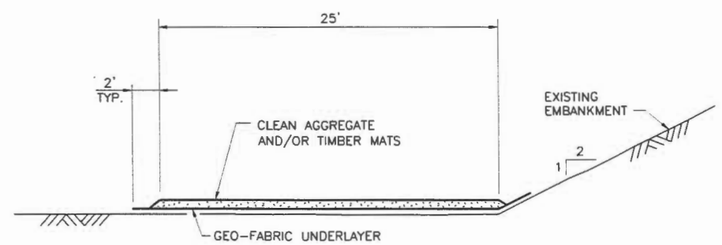

TYPICAL SECTION – ACCESS ROAD
SCALE: 1"=5'

AERIAL PLAN

PRELIMINARY
APRIL 18, 2012

2013-00252-JTF
Drawing 8 of 11

SITE ACCESS NOTES

1. SEE DWG. 3.05 AND 3.06 FOR ELEVATION AND DETAILS OF TEMPORARY BRIDGE.
2. ACCESS ROAD SHALL CONSIST OF GEO-FABRIC UNDERLAYER BENEATH CLEAN AGGREGATE AND/OR TIMBER MATS. THE ACCESS ROAD SHALL FOLLOW THE TOE OF THE RAILROAD EMBANKMENT OR AS DIRECTED BY THE ENGINEER.
3. ALL MATERIALS USED FOR THE ACCESS ROAD AND TEMPORARY BRIDGE SHALL BE COMPLETELY REMOVED FROM THE SITE UPON COMPLETION OF THE PROJECT. AFFECTED AREAS SHALL BE RESTORED TO PRE-CONSTRUCTION CONDITIONS.

ESTIMATED QUANTITIES

ACCESS ROAD ..... 2,500 LIN. FT.
STORAGE AREA (200'x30')..... 600 SQ. FT.

1088.00

No	Date	Revision	By/Par

Division	NORTH	Sub-division	RAINY	Mile Mille	13.10

BRIDGE 13.10
NEAR: HARNEY, MN
BRIDGE REPLACEMENT
SITE ACCESS

Drawn Dessin	dwh	Designed Conception	ab	Checked Verification		Scale Echelle	AS NOTED	Date 2012/04/18

Office of Chief Engineer
Bureau de l'Ingenieur en chef
CN

File Reference	13.10 RAINY	Drawing Number Dessin Numero	AA1401-13.10-3.04

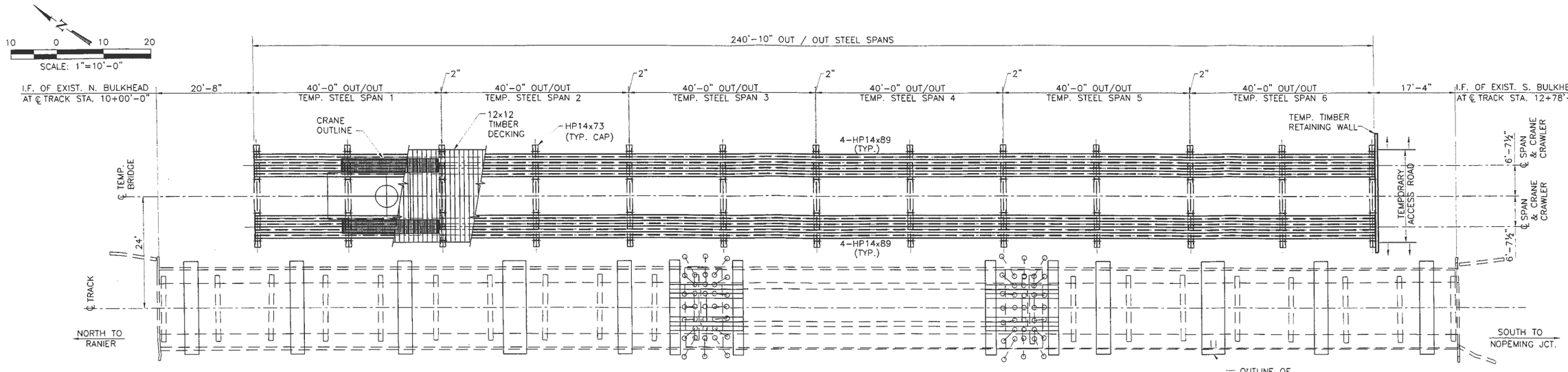

FOR PILE LAYOUT OF TEMPORARY BRIDGE SEE DRAWING 3.09

PLAN OF EXISTING & TEMPORARY BRIDGE

SCALE 1"=10'-0"

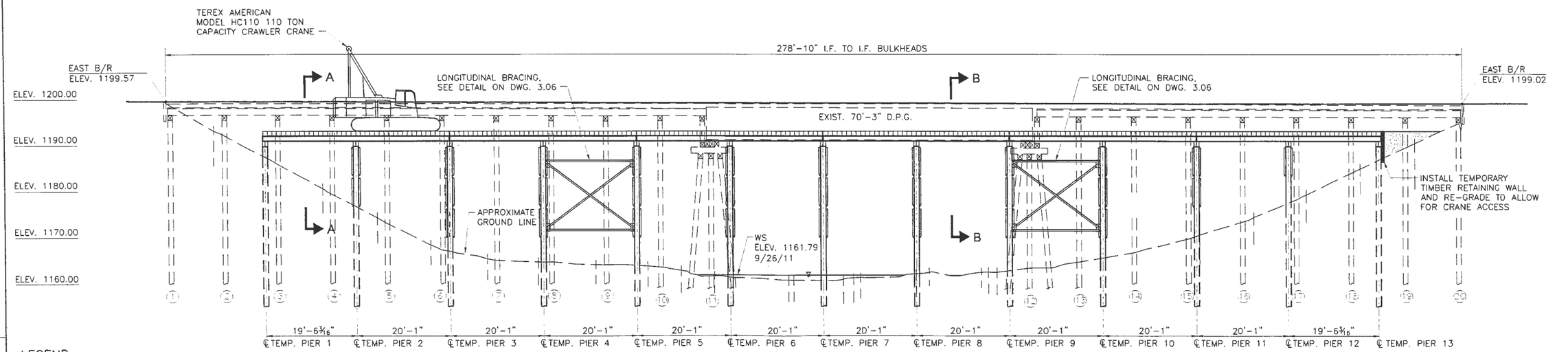

ELEVATION OF EXISTING & TEMPORARY BRIDGE

SCALE 1"=10'-0"

LEGEND

① EXISTING BENTS

GRANULAR BACKFILL

GENERAL NOTES

1. IT IS PROPOSED TO BUILD A TEMPORARY BRIDGE NEXT TO THE EXISITNG 278'-10" LONG BALLEST DECK TIMBER TRESTLE TO FACILITATE THE DISMANTLING OF THE EXISTING BRIDGE AND CONSTRUCTION OF THE NEW BRIDGE. THE TEMPORARY STRUCTURE SHALL CONSIST OF 6 BEAM SPANS WITH A TOTAL LENGTH OF 240'-10", SUPPORTED ON STEEL CAPS ON STEEL PILES (HP14x73).
2. FOR ALL OTHER NOTES AND SPECIFICATIONS, SEE DRAWING 3.02.
3. SEE DRAWING 3.06 FOR SECTIONS A-A AND B-B.

PRELIMINARY APRIL 18, 2012

2013-00252-JTF
Drawing 9 of 11

1088.00

SENIOR STRUCTURAL ENGINEER

No	Date	Revision	By Par

Division	NORTH	Sub-division	RAINY	Mile Mille	13.10

BRIDGE 13.10
NEAR: HARNEY, MN
BRIDGE REPLACEMENT
TEMPORARY BRIDGE GENERAL LAYOUT

Drawn Dessin	dwh	Designed Conception	ab	Checked Verification		Scale Echelle	AS NOTED	Date	2012/04/18

Office of Chief Engineer
Bureau de l'Ingenieur en chef

CN

File Reference	13.10 RAINY	Drawing Number Dessin Numero	AA1401-13.10-3.05

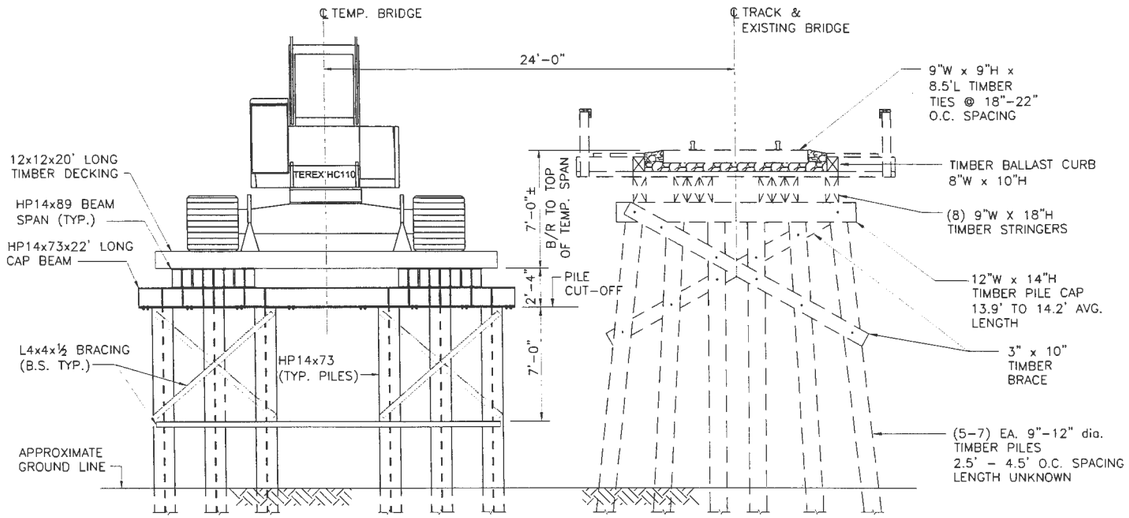

SECTION A-A

SCALE ¼"=1'-0"

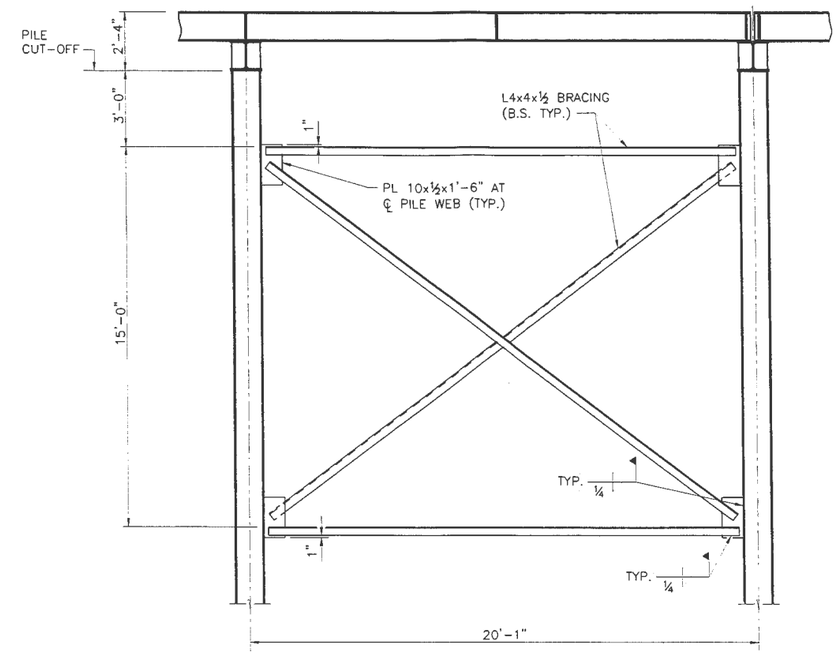

LONGITUDINAL BRACING DETAIL

SCALE ⅛"=1'-0"

LONGITUDINAL BRACING SHOWN APPLIES TO 4 LINES OF PILES (2 OUTSIDE, 2 INSIDE) AT EACH LONGITUDINAL BRACING LOCATION

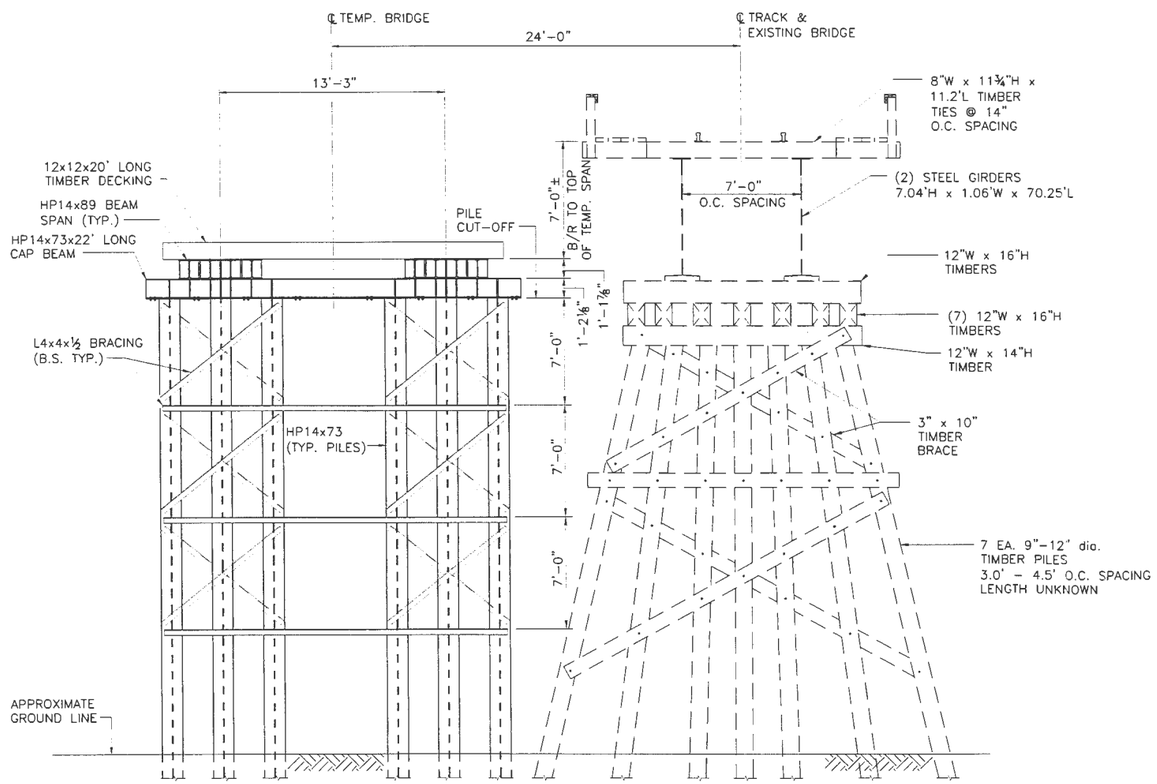

SECTION B-B

SCALE ¼"=1'-0"

2013-00252-JTF
Drawing 10 of 11

PRELIMINARY
APRIL 18, 2012

No	Date	Revision	By	Par

Division NORTH Sub-division RAINY Mile Mille 13.10

BRIDGE 13.10

NEAR: HARNEY, MN

BRIDGE REPLACEMENT TEMPORARY BRIDGE TYPICAL SECTIONS

Drawn Dessin dwh | Designed Conception ab | Checked Verification | Scale Echelle AS NOTED | Date 2012/04/18

Office of Chief Engineer
Bureau de l'Ingenieur en chef

CN

File Reference 13.10 RAINY | Drawing Number Dessin Numero AA1401-13.10-3.06

1088.00

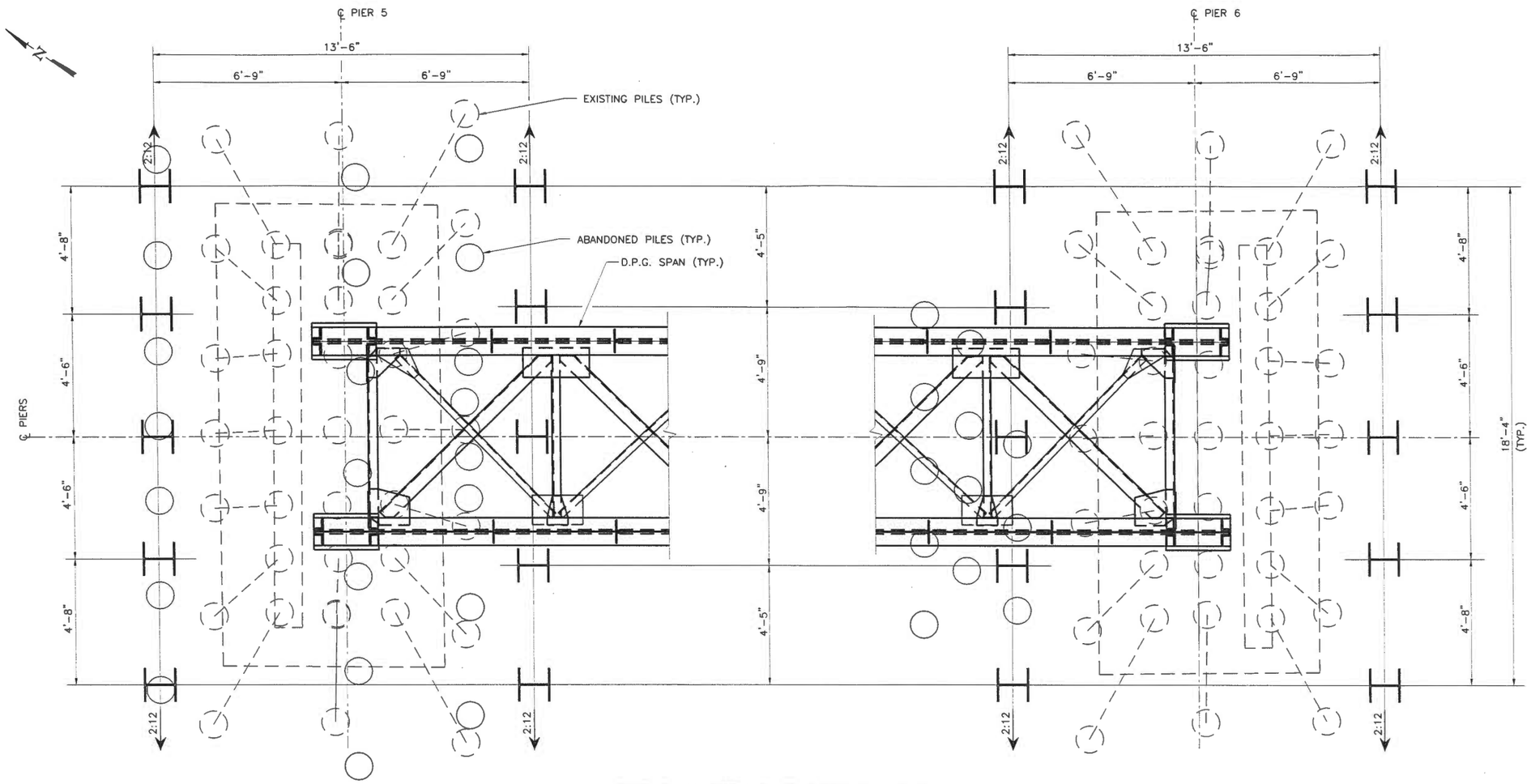

PILE PLAN DETAILS AT PIERS 5 AND 6

SCALE: ½"=1'-0"

SENIOR STRUCTURAL ENGINEER

No	Date	Revision	By/Par

Division NORTH Sub-division RAINY Mile Mille 13.10

BRIDGE 13.10

NEAR: HARNEY, MN

BRIDGE REPLACEMENT

PILE DETAILS

Drawn Dessin dwh Designed Conception ab Checked Verification Scale Echelle AS NOTED Date 2012/04/18

Office of Chief Engineer

Bureau de l'Ingenieur en chef

CN

File Reference 13.10 RAINY Drawing Number Dessin Numero AA1401-13.10-3.11

PRELIMINARY

APRIL 18, 2012

1088.00

2013-00252-JTF

Drawing 11 of 11