Information for File # 2011-03229-DAS

Applicant: Scott Morgan, Minnesota Department of Transportation District 7

Corps Contact: Benjamin Cox

Address: 180 Fifth Street East, Saint Paul, Minnesota 55101

Email: benjamin.r.cox@usace.army.mil

Phone: (651) 290-5377

County: Cottonwood, Minnesota

Section, Township, Range: sec. 28, 29, 30, 31, and 32, T. 106 N., R. 33 W. and sec. 35 and 36. T. 106 N., R. 34 W.

Information Complete On: 10 July 2014

Posting Expires On: 28 July 2014

Authorization Type: This application is being reviewed in accordance with the practices for documenting Corps jurisdiction under Sections 9 & 10 of the Rivers and Harbor Act of 1899 and Section 404 of the Clean Water Act identified in Regulatory Guidance Letter 07-01. We have made a preliminary determination that the aquatic resources that would be impacted by the proposed project are regulated by the Corps of Engineers under Section 404 of the Clean Water Act. Our jurisdictional review and final jurisdictional determination could result in modifications to the scope of the project's regulated waterbody/wetland impacts and compensatory mitigation requirements identified above.

Project Description and Purpose: The applicant proposes to discharged dredged or fill material into 1.31 acres of wetlands and 1,600 linear feet of tributary ditch for the purpose of improving 5 miles of Trunk Highway 60 between Butterfield and Mountain Lake. The improvements would include the construction of two additional lanes approximately 90 feet south of the existing two lane highway to create a divided four lane highway. The project is part of a larger effort to improve safety and geometric continuity on TH 60 from the Iowa border the Minneapolis/St. Paul.

Name, Area, and Type of Waters Subject to Loss: The 1.31 acres of wetlands proposed to be filled are all palustrine emergent type wetlands with saturated and temporarily flooded water regimes. The five wetlands are located in an agricultural landscape. Two of the wetlands would be considered farmed wetlands. The "Wetland and Waterways Table" in the attached drawings provides specific information for each of the wetlands to be impacted. In addition to the wetland impacts, 1,600 linear feet of a tributary ditch would be filled and a new ditch would be constructed south of its current location. This ditch is located along the edge of an agricultural field. The part of the tributary that would be

impacted is relatively straight and is located at the headwaters of the tributary system. A channel of approximately the same length and cross section would be constructed south and east of its current location in uplands.

Alternatives Considered: Because the proposed project involves improvements to an existing roadway, alternatives are limited. The applicant has considered realigning the highway but did not further pursue this alternative due to impacts to agricultural lands, existing towns, public lands, and other environmental concerns.

Compensatory Mitigation: The applicant has proposed to compensate for the permanent loss of wetlands associated with the project by debiting wetland credits from the Local Road Wetland Replacement Program. Depending on the location and type of wetland credits proposed as compensatory mitigation the applicant would be required to debit between 3.388 and 3.812 wetland credits from a Corps approved wetland bank.

Drawings: See attached.

MN TH 60
SP 1703-70 Cottonwood & Watonwan County
Wetland & Waterways Summary Table

Please note - the wetland numbers are going in the opposite direction of the roadway stationing.
As the wetland numbers increase, the stationing decreases.

								Actual Impacts		Impacts by Type **(acre)**												
Wetland Label from MFRA	**Roadway Stationing**	**Offset**	**Current Land Use**	**Basin Size sq ft**	**Basin Size acres**	**Amount in Right-of-way acres**	**Potential Wetland Acres Impacted**	**Impact Sq Ft**	**Impact Ac**	**1**	**2**	**3**	**4**	**5**	**6**	**7**	**Channel**	**Circular 39**	**Cowardin Type**	**Wetland community**	**Plant community (species)**	**Notes**
None (ditch)	865+00 to 875+15	right	Private ditch	Not quantified		1.12	0.57	24836	0.57								1774 ft#		R	landscaped / volunteer grasses	Phalaris arundinacea,	Smaller number is the "wetland" number - larger number includes vegetation to the top of banks. Channel Change length.#
12	854+73 to 856+30	left	farmed	4067	0.09	0.09	0.09	4067.0	0.09	0.09								Type 1	PEMA	Seasonally Flooded Basin	Pastinaca sativa, Zea mays, Phalaris arundinacea	Tile outlets into ditch here
13	812+80 to 814+10	left	traditional	9844	0.23	0.00	0.00	0.0	0.00									Type 2	PEMB	Fresh Meadow	Phalaris arundinacea	north side of existing roadway, any culvert work would be temporary impacts
14	812+30 to 812+90	right	traditional	2233	0.05	0.05	0.05	2233.0	0.05		0.05							Type 2	PEMB	Sedge Meadow	Phalaris arundinacea, carex stricta, carex lacustris	southeast corner - new lanes go through it.
15	810+00 to 810+95	left	traditional	6296	0.15	0.00	0.00	0.0	0.00									Type 2	PEMB	Fresh Meadow	Phalaris arundinacea	north side of existing roadway, any culvert work would be temporary impacts
16	807+00 to 810+65	right	traditional	174967	4.0*	0.32	0.32	13817.0	0.32		0.32							Type 2	PEMB	Fresh Meadow	Phalaris arundinacea	Larger complex in SW corner with a channel that runs through. New lanes encroach
17	808+50 to 809+45	center of new lane	traditional	1944	0.05	0.05	0.05	1944.0	0.05		0.05							Type 2	PEMB	Fresh Meadow	Carex stricta, Equisetum arvense, Phalaris arundinacea	Under new lanes, total impact.
32	752+30 to 753+30	left	traditional	1634	0.04	0.00	0.00	0.0	0.00									Type 2	PEMC	Shallow Marsh	phalaris arundinacea, poa pratensis, polygonum pensylvanicum	Between westbound lanes and railroad.
18	679+00 to 682+65	left	traditional	18360	0.42	0.00	0.00	0.0	0.00									Type 2	PEMB	Sedge Meadow	Phalaris arundinacea	Between westbound lanes and railroad.
19	678+85 to 684+40	right	farmed	321158	7.37**	0.80	0.80	34778.0	0.80	0.80								Type 1	PEMA	Seasonally Flooded Basin	Rumex orbiculatus, amaranthus retroflexus, phalaris arundinacea, polygonum persicaria, heracleum lanatum, glycine max.	Part of a larger complex that extends to the north of the highway, and south of this "ponding" area.
								81675	1.88	0.89	0.42						1774 ft					

MFRA is the consultant that MnDOT hired to do the wetland delineation

* - size of basin was not completely determined, because the majority of it was off right-of-way.

** - This basin size is approximate, based on scale of aerial photo, because trespassing is frowned on.

amaranthus retroflexus – red root amaranth
Pastinaca sativa – Wild Parsnip
Zea mays – corn
Rumex orbiculatus – Bitter Dock

amaranthus retroflexus – red root amaranth
polygonum persicaria – Ladysthumb
heracleum lanatum – Cow Parsnip
glycine max – soybeans

polygonum pensylvanicum – Pennsylvania smartweed
Equisetum arvense – field horsetail
poa pratensis – Kentucky Bluegrass
Carex stricta – tussock sedge

Phalaris arundinacea – Reed Canary Grass

This map was created using MFRA's Geographic Information Systems (GIS), it is a compilation of information and data from various sources. This map is not a surveyed or legally recorded map and is intended to be used as a reference. MFRA is not responsible for any inaccuracies contained herein.

Center Gap Wetlands

Mn/DOT TH60

State Project 8827-124

0 0.5 1

Miles

Sources: MnGEO, NRCS (2010 aerial photo)

MFRA #18855

Potential alignment of relocated ditch, outside highway right-of-way

Existing private ditch, needs relocation out from under highway.

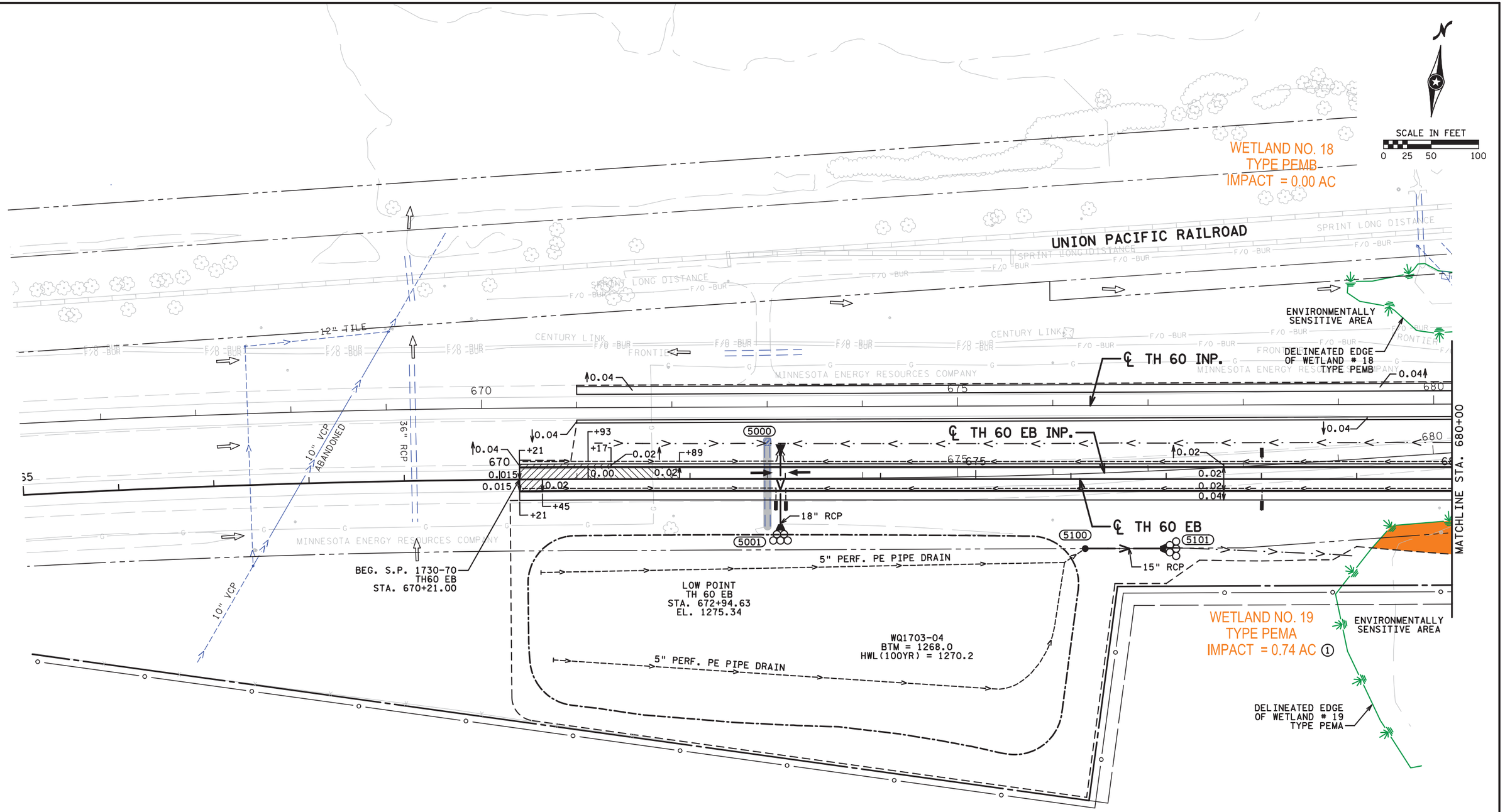

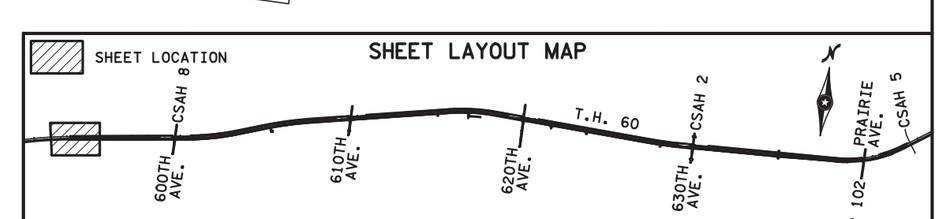

DATE: 4/18/2014 TIME: 9:27:57 AM
FILENAME: K:\g-m\MnDOT\5467000\hwy-brdg\hwy\exhibit\wetland_impacts\cdl70370_wet01.dgn

SPECIFIC NOTES:

① WETLAND IMPACT HAS BEEN REDUCED FROM 0.80 ACRES TO 0.74 ACRES DURING FINAL DESIGN.

DRAWN BY: CEH CHECKED BY: MAW	I HEREBY CERTIFY THAT THIS SHEET WAS PREPARED BY ME OR UNDER MY DIRECT SUPERVISION AND THAT I AM A DULY LICENSED PROFESSIONAL ENGINEER UNDER THE LAWS OF THE STATE OF MINNESOTA.	SIGNATURE: PRINTED NAME: DATE: LIC. NO.	TKDA 444 Cedar Street, Suite 1500 Saint Paul, MN 55101 651.292.4400 tkda.com	MINNESOTA DEPARTMENT OF TRANSPORTATION TH 60	WETLAND IMPACTS TH 60 EB STA. 665+00 TO STA. 680+00

STATE PROJ. NO. 1703-70 (TH 60)

Sheet No. 1 of 8 Sheets

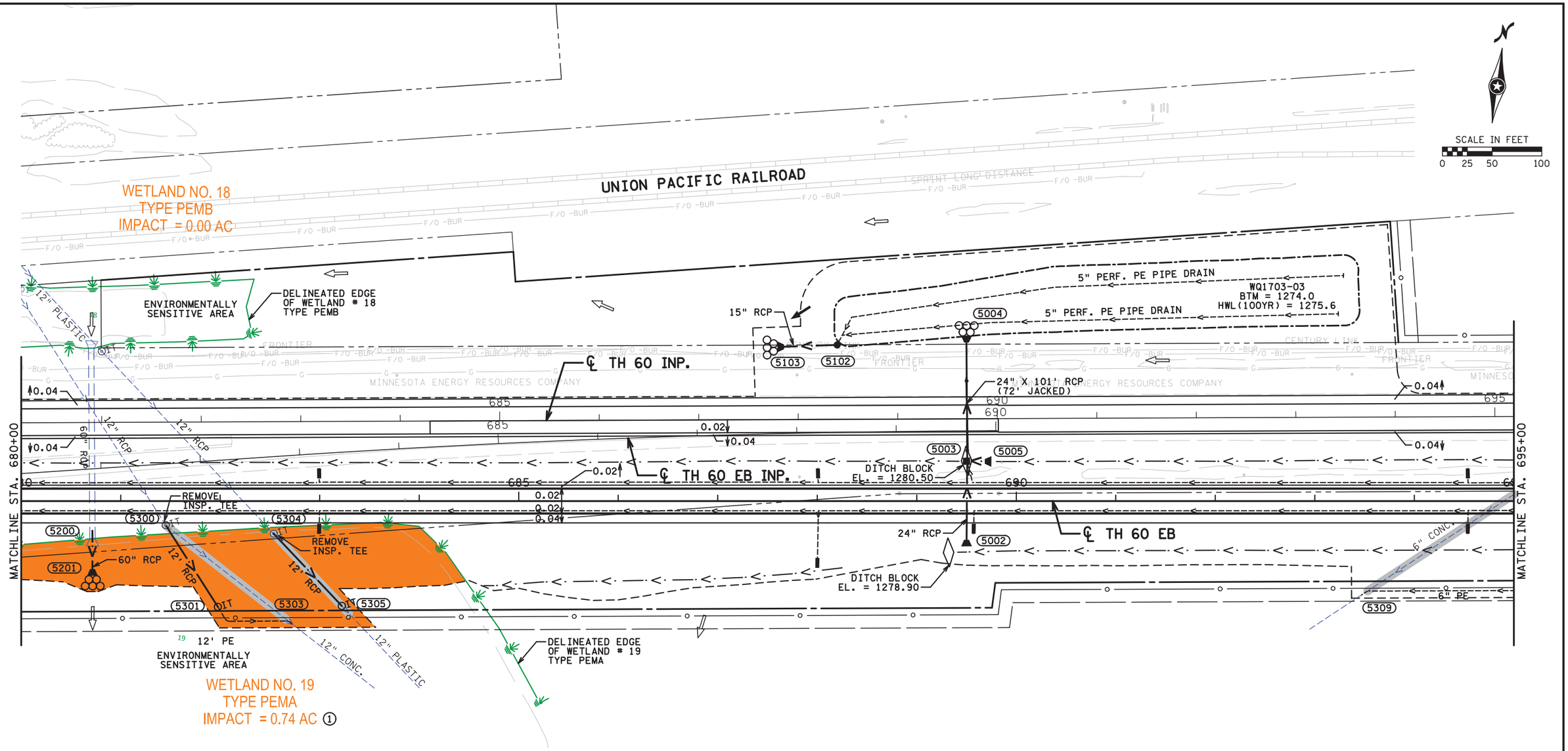

DATE: 4/18/2014 TIME: 9:28:32 AM
FILENAME: K:\g-m\MnDOT\5467000\hwy-brdg\hwy\exhtbit\wetland_Impacts\odt70370_wet02.dgn

SPECIFIC NOTES:

① WETLAND IMPACT HAS BEEN REDUCED FROM 0.80 ACRES TO 0.74 ACRES DURING FINAL DESIGN.

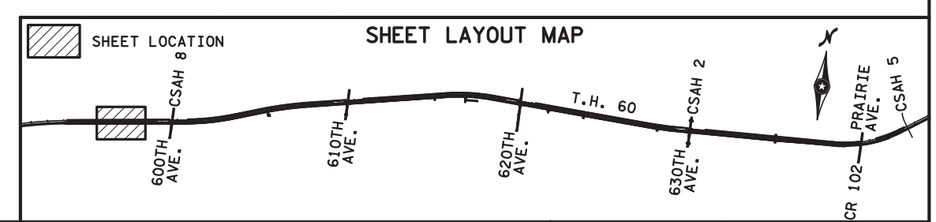

DRAWN BY: CEH CHECKED BY: MAW	I HEREBY CERTIFY THAT THIS SHEET WAS PREPARED BY ME OR UNDER MY DIRECT SUPERVISION AND THAT I AM A DULY LICENSED PROFESSIONAL ENGINEER UNDER THE LAWS OF THE STATE OF MINNESOTA.	SIGNATURE: PRINTED NAME: DATE: LIC. NO.	TKDA 444 Cedar Street, Suite 1500 Saint Paul, MN 55101 651.292.4400 tkda.com MINNESOTA DEPARTMENT OF TRANSPORTATION TH 60	WETLAND IMPACTS TH 60 EB STA. 680+00 TO STA. 695+00

STATE PROJ. NO. 1703-70 (TH 60)

Sheet No. 2 of 8 Sheets

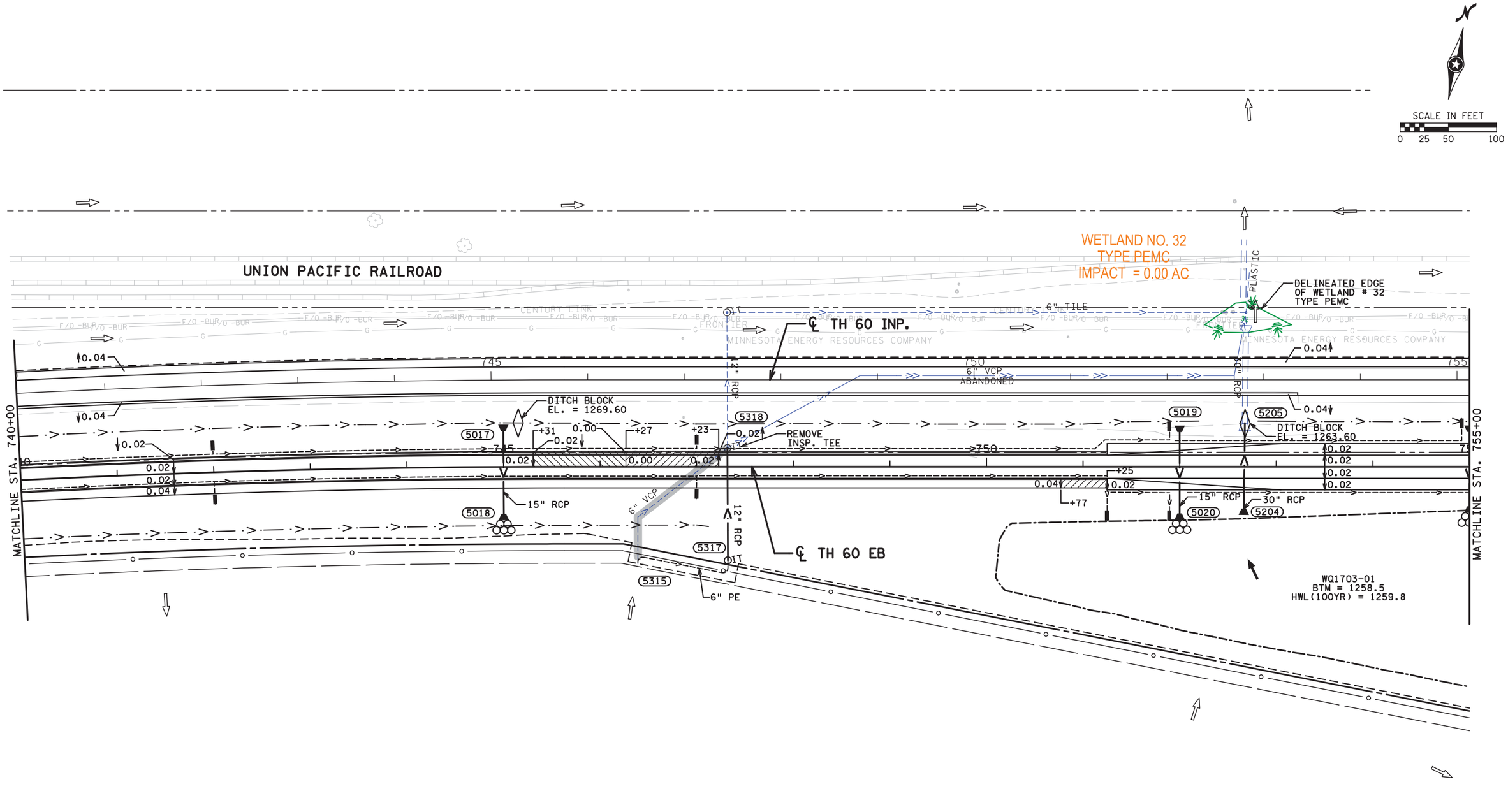

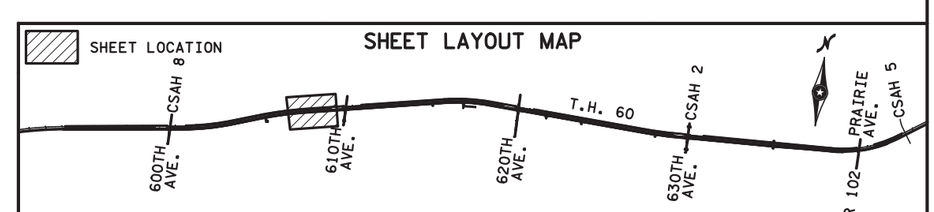

DATE: 4/18/2014 TIME: 9:29:24 AM
FILENAME: K:\g-m\MnDOT\5467000\hwy-brdg\hwy\exhibit\wetland_Impacts\cdl70370_wet06.dgn

DRAWN BY: CEH	I HEREBY CERTIFY THAT THIS SHEET WAS PREPARED BY ME OR UNDER MY DIRECT SUPERVISION AND THAT I AM A DULY LICENSED PROFESSIONAL ENGINEER UNDER THE LAWS OF THE STATE OF MINNESOTA.	SIGNATURE:	TKDA 444 Cedar Street, Suite 1500 Saint Paul, MN 55101 651.292.4400 tkda.com	MINNESOTA DEPARTMENT OF TRANSPORTATION TH 60
CHECKED BY: MAW		PRINTED NAME: DATE: LIC. NO.		

WETLAND IMPACTS
TH 60 EB STA. 740+00 TO STA. 755+00

STATE PROJ. NO. 1703-70 (TH 60)

Sheet No. 3 of 8 Sheets

DATE: 4/18/2014 TIME: 9:31:34 AM
FILENAME: K:\g-m\MnDOT\5467000\hwy-brdg\hwy\exhibit\wetland_impacts\cdl70370_wet10.dgn

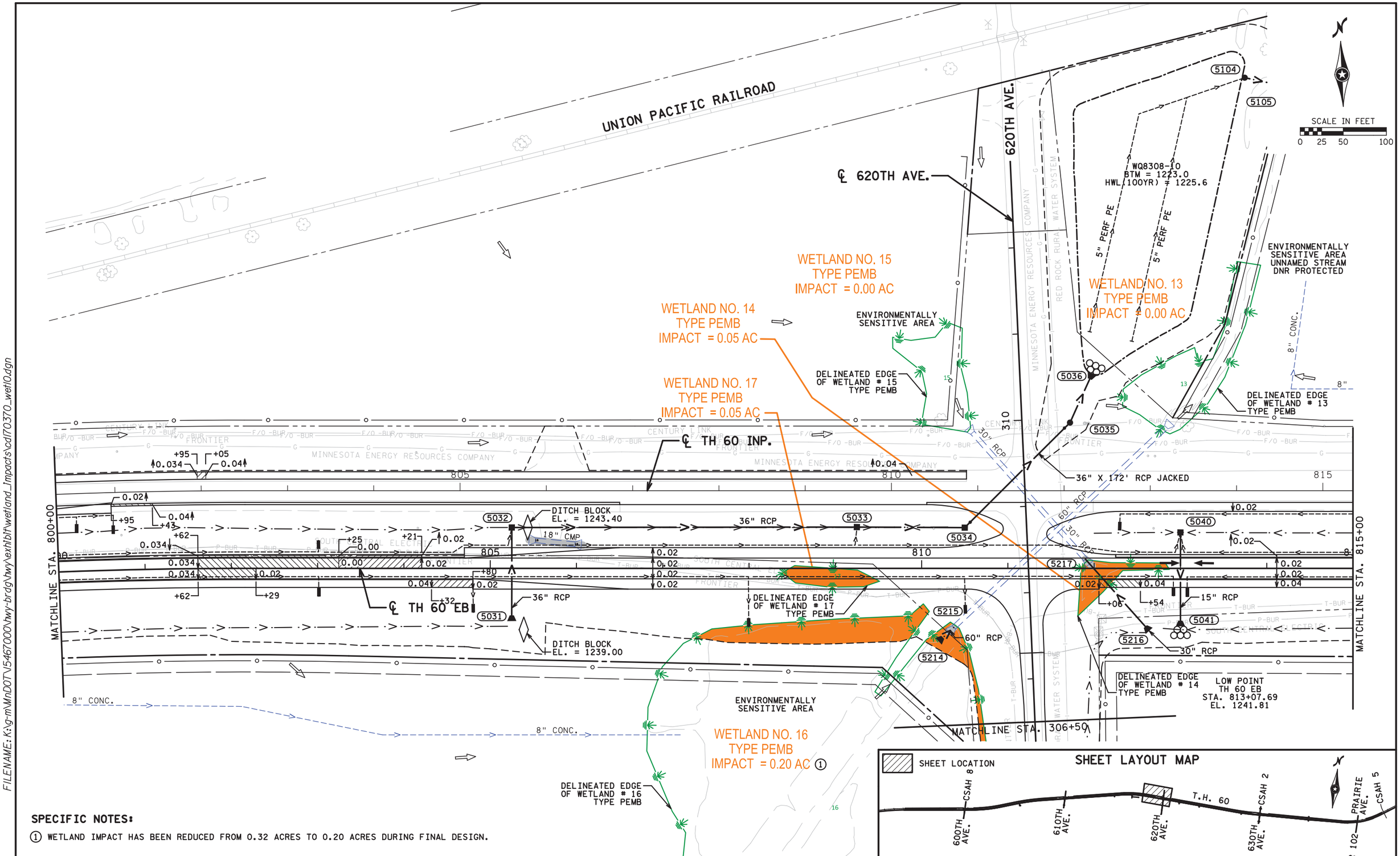

SPECIFIC NOTES:

① WETLAND IMPACT HAS BEEN REDUCED FROM 0.32 ACRES TO 0.20 ACRES DURING FINAL DESIGN.

DRAWN BY: CEH	I HEREBY CERTIFY THAT THIS SHEET WAS PREPARED BY ME OR UNDER MY DIRECT SUPERVISION AND THAT I AM A DULY LICENSED PROFESSIONAL ENGINEER UNDER THE LAWS OF THE STATE OF MINNESOTA.	SIGNATURE:	TKDA 444 Cedar Street, Suite 1500 Saint Paul, MN 55101 651.292.4400 tkda.com	MINNESOTA DEPARTMENT OF TRANSPORTATION TH 60	WETLAND IMPACTS TH 60 EB STA. 800+00 TO STA. 815+00	STATE PROJ. NO. 1703-70 (TH 60)
CHECKED BY: MAW		PRINTED NAME: DATE: LIC. NO.				Sheet No. 4 of 8 Sheets

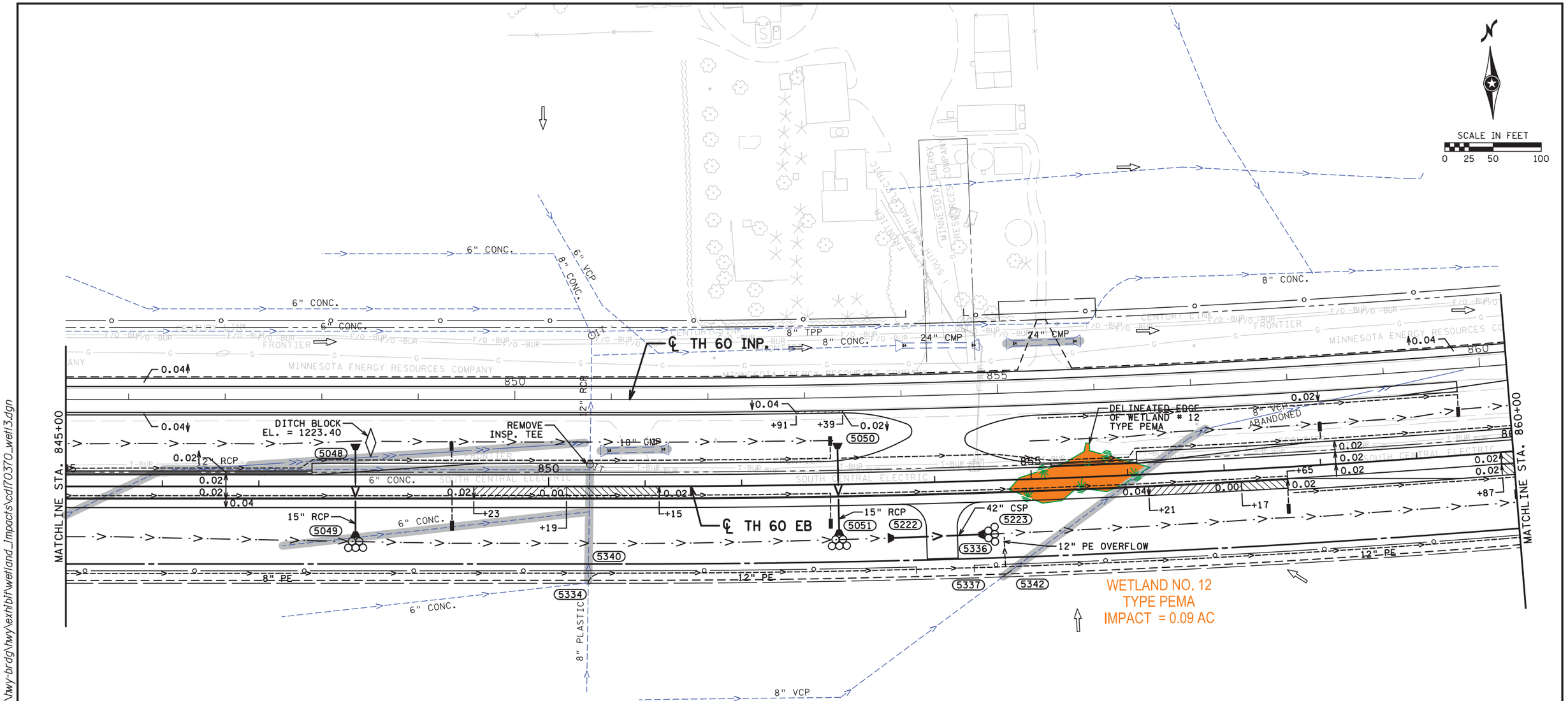

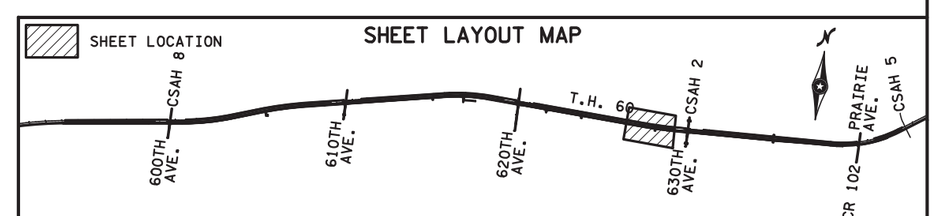

DATE: 4/18/2014 TIME: 9:31:59 AM
FILENAME: K:\g-m\MnDOT\5467000\hwy-brdg\hwy\exhibit\wetland_impacts\cdl70370_wet13.dgn

DRAWN BY: CEH CHECKED BY: MAW	I HEREBY CERTIFY THAT THIS SHEET WAS PREPARED BY ME OR UNDER MY DIRECT SUPERVISION AND THAT I AM A DULY LICENSED PROFESSIONAL ENGINEER UNDER THE LAWS OF THE STATE OF MINNESOTA.	SIGNATURE: PRINTED NAME: DATE: LIC. NO.	TKDA 444 Cedar Street, Suite 1500 Saint Paul, MN 55101 651.292.4400 tkda.com	MINNESOTA DEPARTMENT OF TRANSPORTATION TH 60	WETLAND IMPACTS TH 60 EB STA. 845+00 TO STA. 860+00	STATE PROJ. NO. 1703-70 (TH 60) Sheet No. 5 of 8 Sheets

DATE: 4/23/2014 TIME: 8:12:46 AM
FILENAME: K:\g-m\MnDOT\5467000\hwy-brdg\hwy\exhibit\wetland_Impacts\cdl70370_wet14.dgn

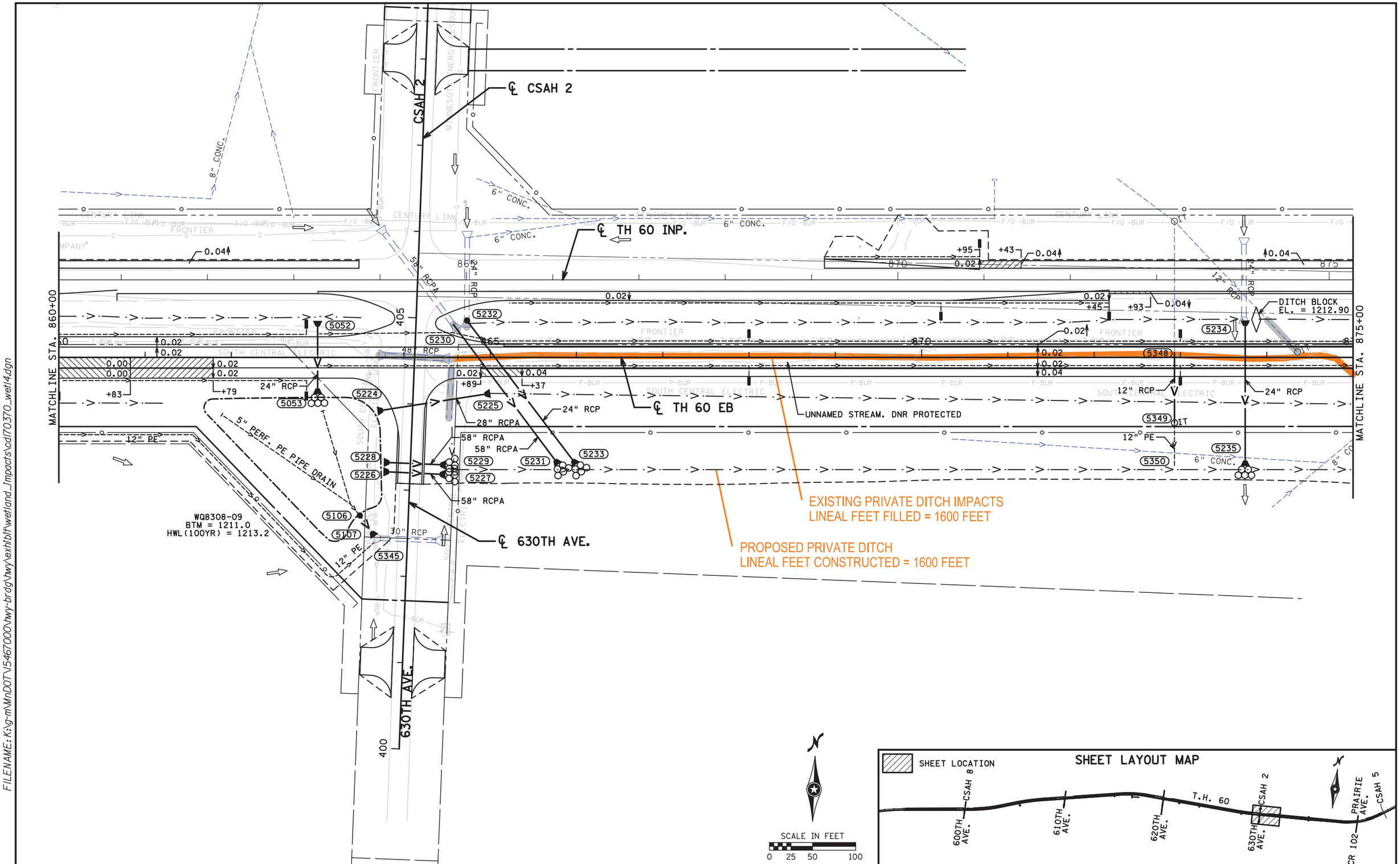

DRAWN BY: CEH CHECKED BY: MAW	I HEREBY CERTIFY THAT THIS SHEET WAS PREPARED BY ME OR UNDER MY DIRECT SUPERVISION AND THAT I AM A DULY LICENSED PROFESSIONAL ENGINEER UNDER THE LAWS OF THE STATE OF MINNESOTA.	SIGNATURE: PRINTED NAME: DATE: LIC. NO.	TKDA 444 Cedar Street, Suite 1500 Saint Paul, MN 55101 651.292.4400 tkda.com	MINNESOTA DEPARTMENT OF TRANSPORTATION TH 60

WETLAND IMPACTS
TH 60 EB STA. 860+00 TO STA. 875+00

STATE PROJ. NO. 1703-70 (TH 60)
Sheet No. 6 of 8 Sheets

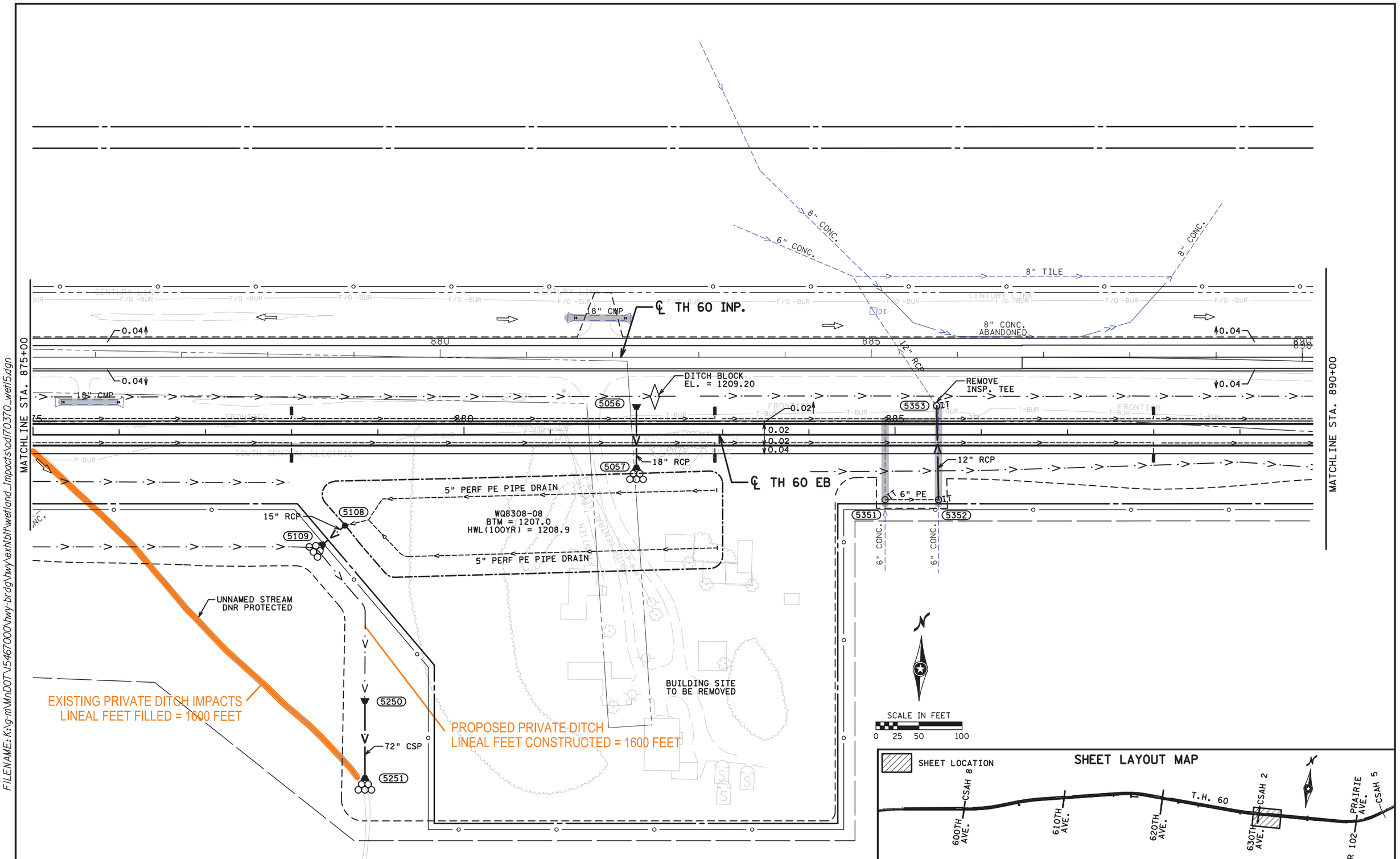

DATE: 4/23/2014 TIME: 8:14:40 AM
FILENAME: K:\g-m\MnDOT\546700\hwy-brdg\hwy\exhibit\wetland_Impacts\cdl70370_wet15.dgn

DRAWN BY: CEH	I HEREBY CERTIFY THAT THIS SHEET WAS PREPARED BY ME OR UNDER MY DIRECT SUPERVISION AND THAT I AM A DULY LICENSED PROFESSIONAL ENGINEER UNDER THE LAWS OF THE STATE OF MINNESOTA.	SIGNATURE:	TKDA 444 Cedar Street, Suite 1500 Saint Paul, MN 55101 651.292.4400 tkda.com	MINNESOTA DEPARTMENT OF TRANSPORTATION TH 60	WETLAND IMPACTS TH 60 EB STA. 875+00 TO STA. 890+00
CHECKED BY: MAW		PRINTED NAME:			STATE PROJ. NO. 1703-70 (TH 60)
		DATE: LIC. NO.			Sheet No. 7 of 8 Sheets

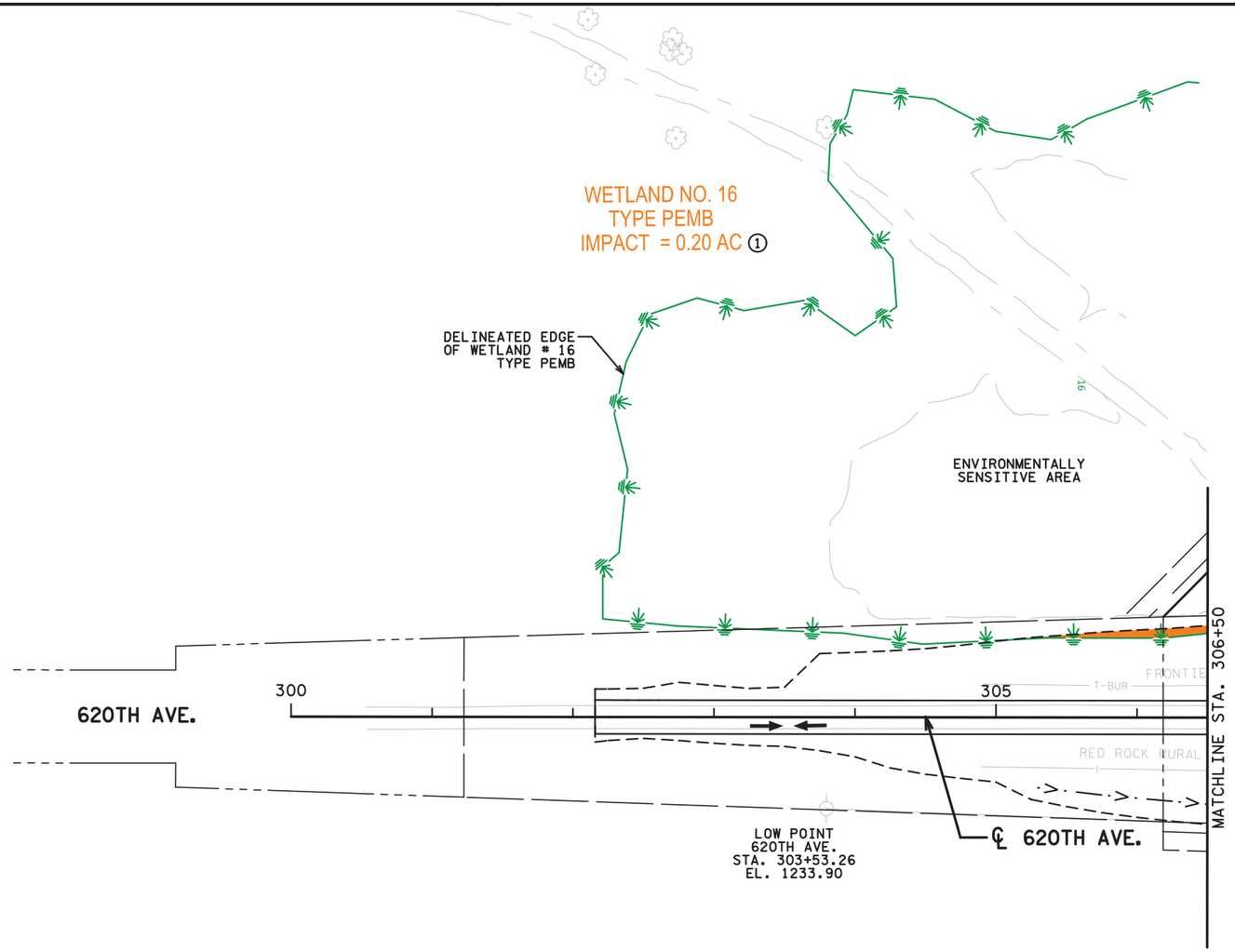

SCALE IN FEET
0 25 50 100

DATE: 4/18/2014 TIME: 9:33:29 AM
FILENAME: K:\g-m\MnDOT\546700\hwy-brdg\hwy\exhibit\wetland_Impacts\cdl70370_wet19.dgn

SPECIFIC NOTES:

① WETLAND IMPACT HAS BEEN REDUCED FROM 0.32 ACRES TO 0.20 ACRES DURING FINAL DESIGN.

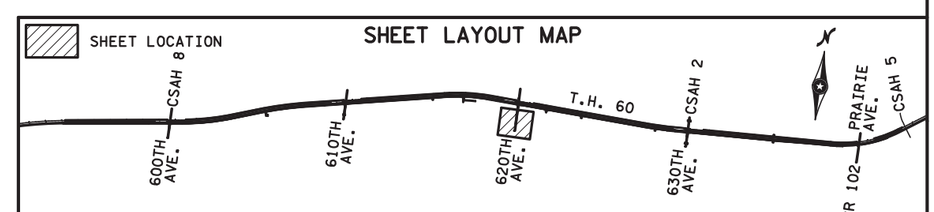

DRAWN BY: CEH	I HEREBY CERTIFY THAT THIS SHEET WAS PREPARED BY ME OR UNDER MY DIRECT SUPERVISION AND THAT I AM A DULY LICENSED PROFESSIONAL ENGINEER UNDER THE LAWS OF THE STATE OF MINNESOTA.	SIGNATURE:	TKDA 444 Cedar Street, Suite 1500 Saint Paul, MN 55101 651.292.4400 tkda.com	MINNESOTA DEPARTMENT OF TRANSPORTATION TH 60	WETLAND IMPACTS 620TH AVE. STA. 300+00 TO STA. 313+00
CHECKED BY: MAW		PRINTED NAME:			STATE PROJ. NO. 1703-70 (TH 60)
		DATE: LIC. NO.			Sheet No. 8 of 8 Sheets

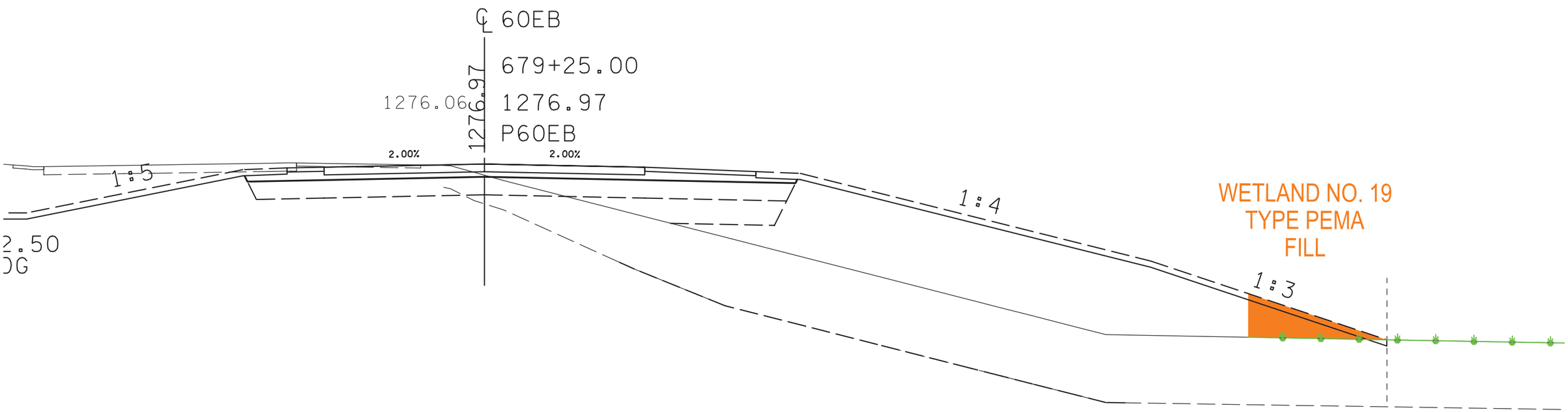
℄ 60EB
679+25.00
1276.06
1276.97
1276.97
P60EB
2.00%
2.00%
1:5
2.50
DG
1:4
WETLAND NO. 19
TYPE PEMA
FILL
1:3

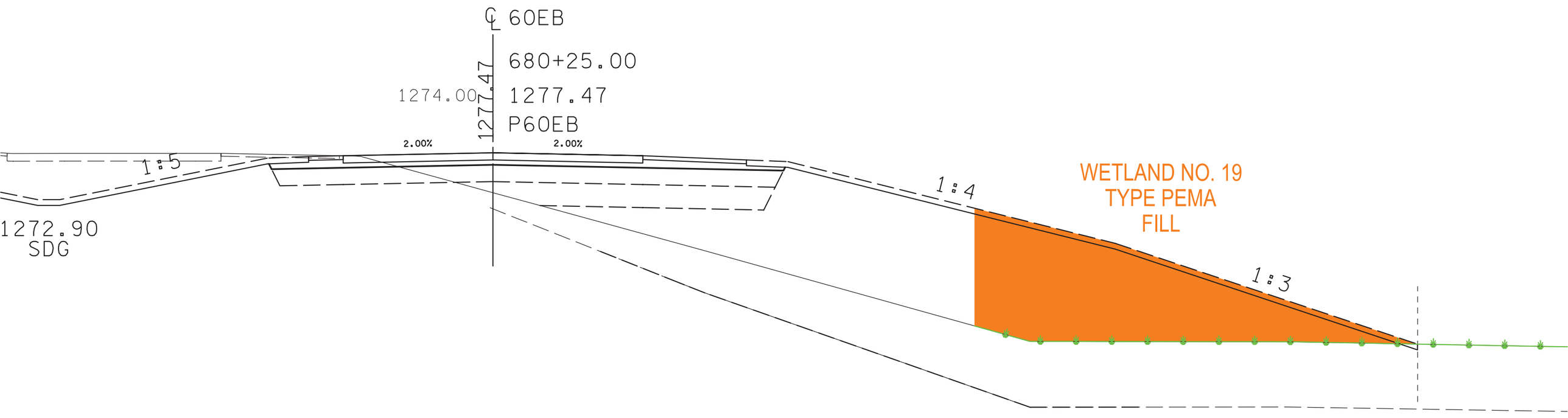
℄ 60EB
680+25.00
1274.00
1277.47
1277.47
P60EB
2.00%
2.00%
1:5
1272.90
SDG
1:4
WETLAND NO. 19
TYPE PEMA
FILL
1:3

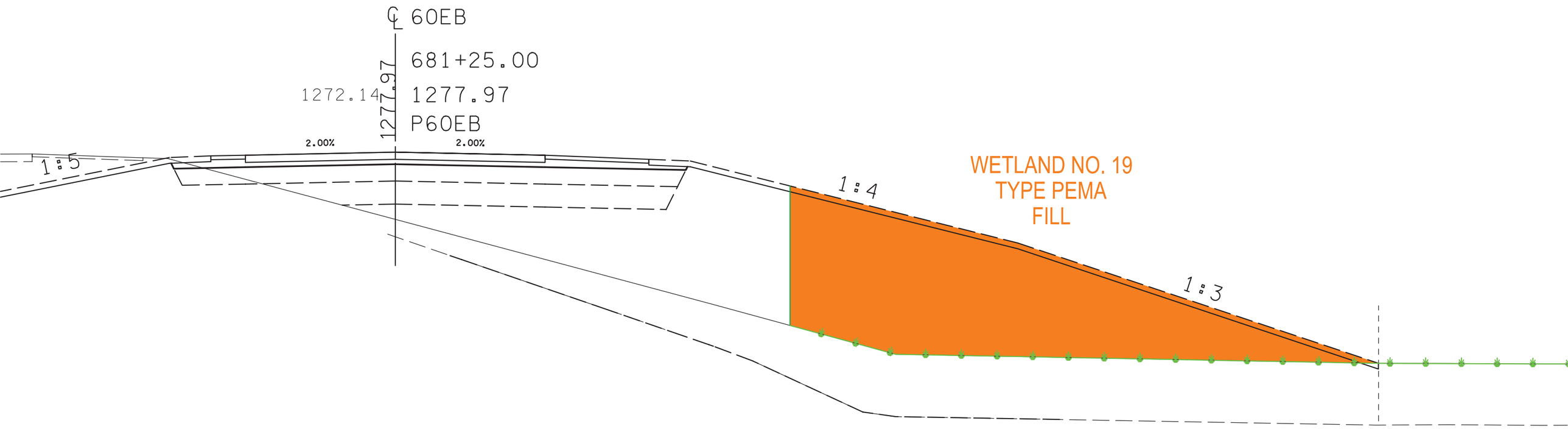
℄ 60EB
681+25.00
1272.14
1277.97
1277.97
P60EB
2.00%
2.00%
1:5
1:4
1:3
WETLAND NO. 19
TYPE PEMA
FILL

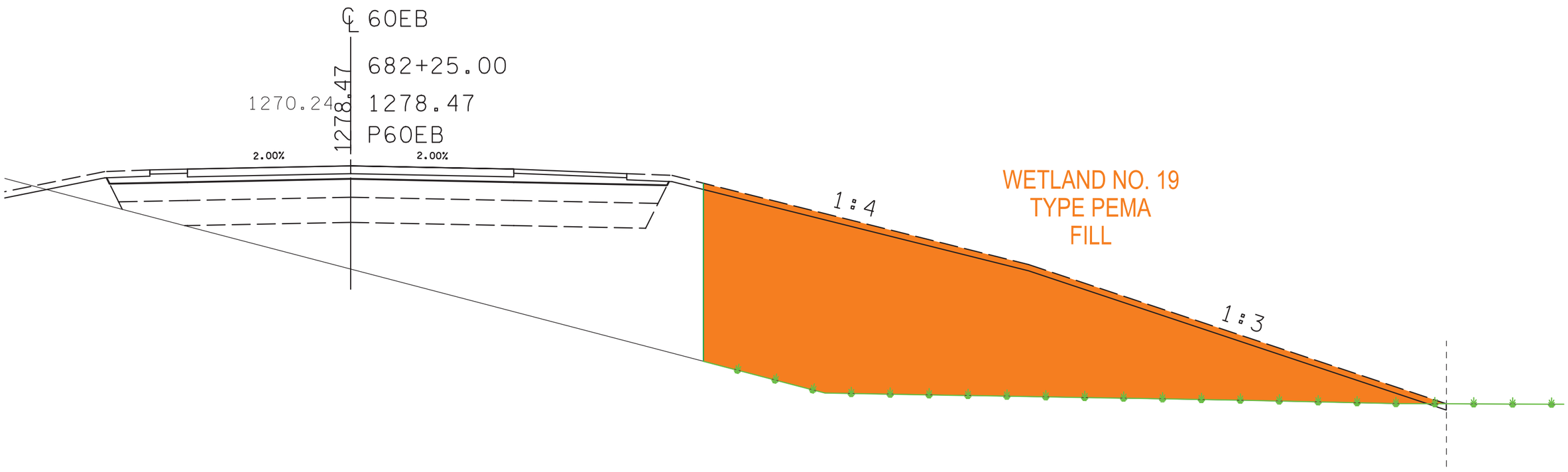
℄ 60EB
682+25.00
1270.24
1278.47
1278.47
P60EB
2.00%
2.00%
1 : 4
1 : 3
WETLAND NO. 19
TYPE PEMA
FILL

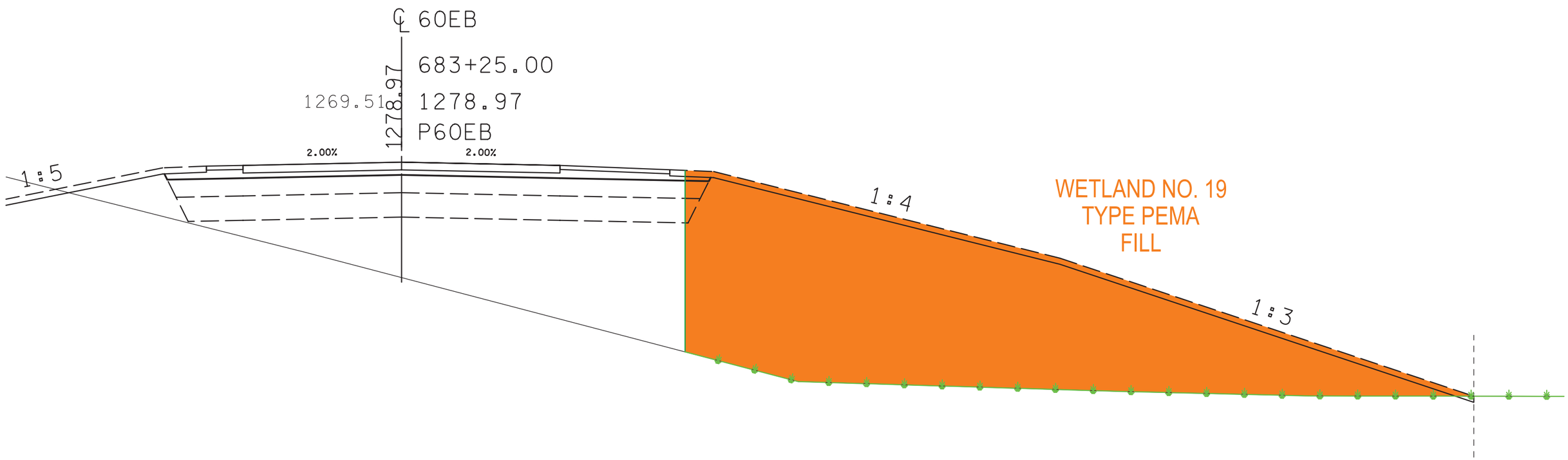
℄ 60EB
683+25.00
1269.51
1278.97
1278.97
P60EB
2.00%
2.00%
1:5
1:4
1:3
WETLAND NO. 19
TYPE PEMA
FILL

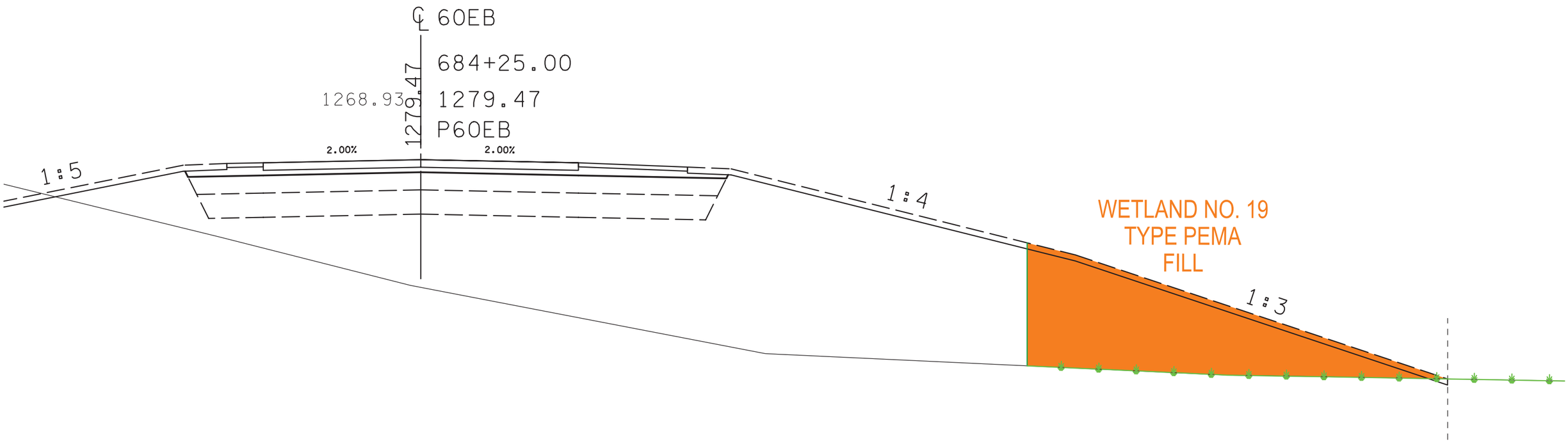
℄ 60EB
684+25.00
1268.93
1279.47
1279.47
P60EB
2.00%
2.00%
1:5
1:4
WETLAND NO. 19
TYPE PEMA
FILL
1:3

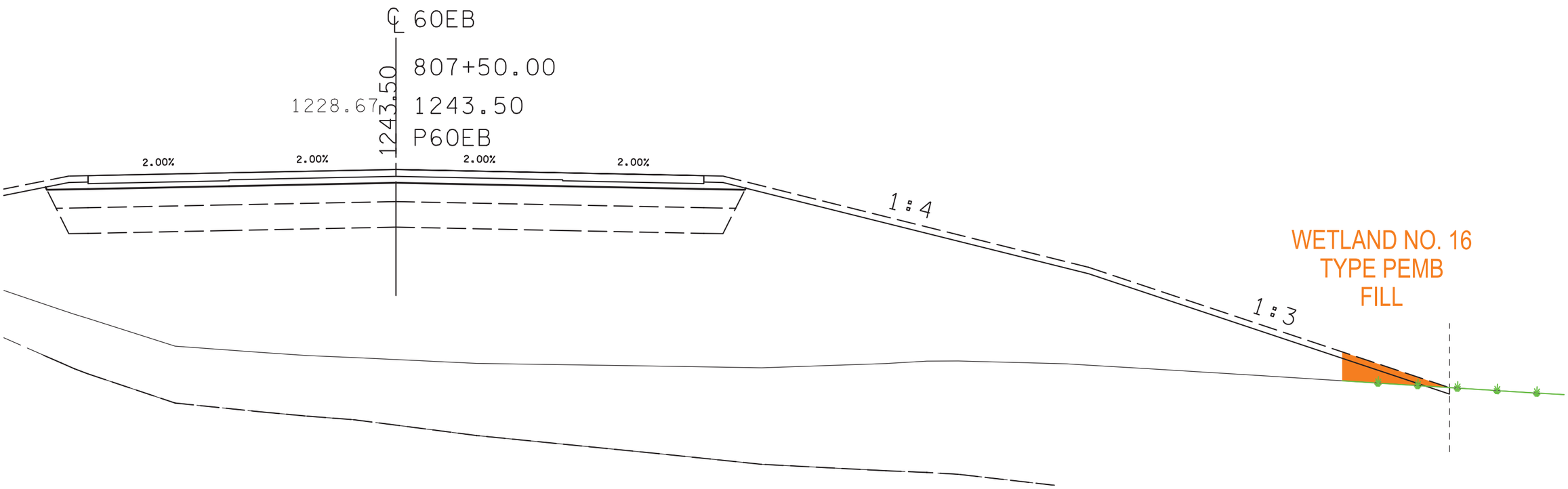
60EB
807+50.00
1228.67
1243.50
1243.50
P60EB
2.00%
2.00%
2.00%
2.00%
1:4
1:3
WETLAND NO. 16
TYPE PEMB
FILL

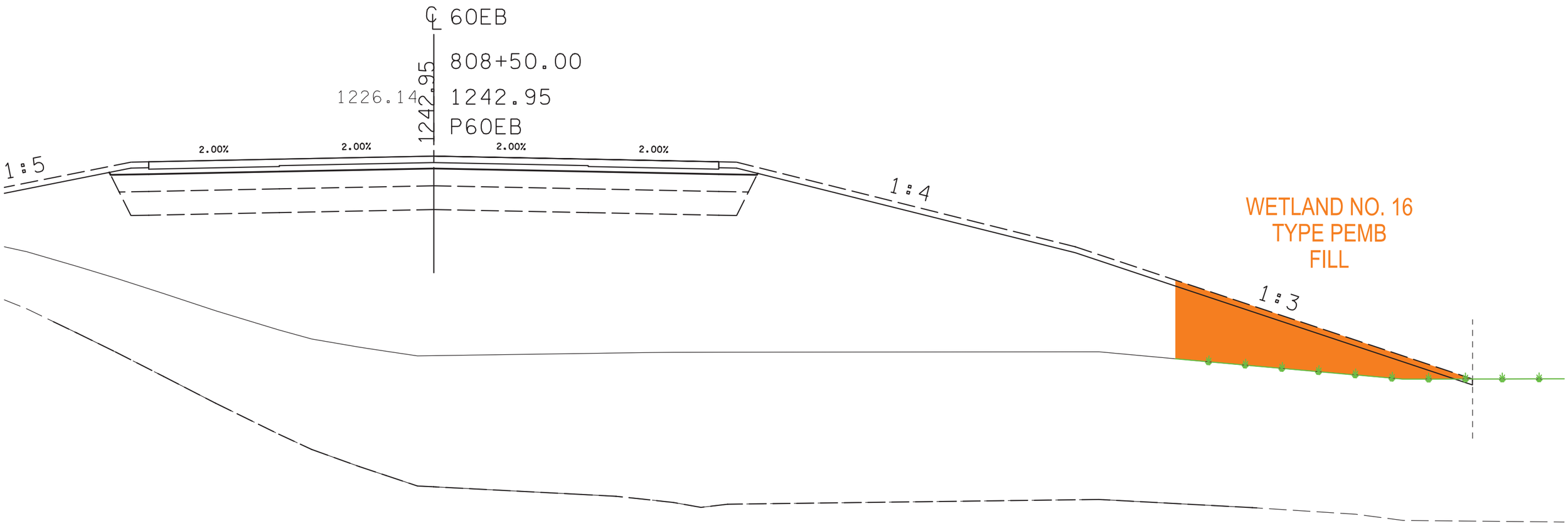
℄ 60EB
808+50.00
1226.14
1242.95
1242.95
P60EB
2.00%
2.00%
2.00%
2.00%
1:5
1:4
1:3
WETLAND NO. 16
TYPE PEMB
FILL

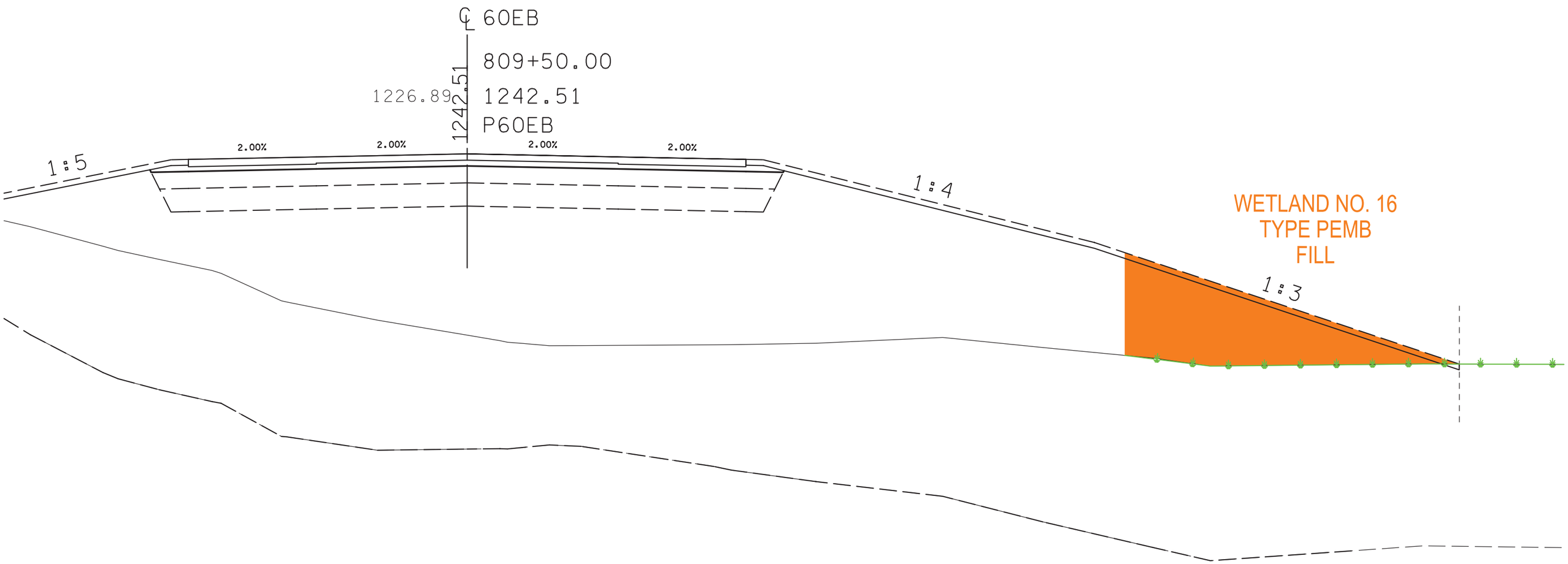
℄ 60EB
809+50.00
1226.89
1242.51
1242.51
P60EB
2.00%
2.00%
2.00%
2.00%
1:5
1:4
1:3
WETLAND NO. 16
TYPE PEMB
FILL

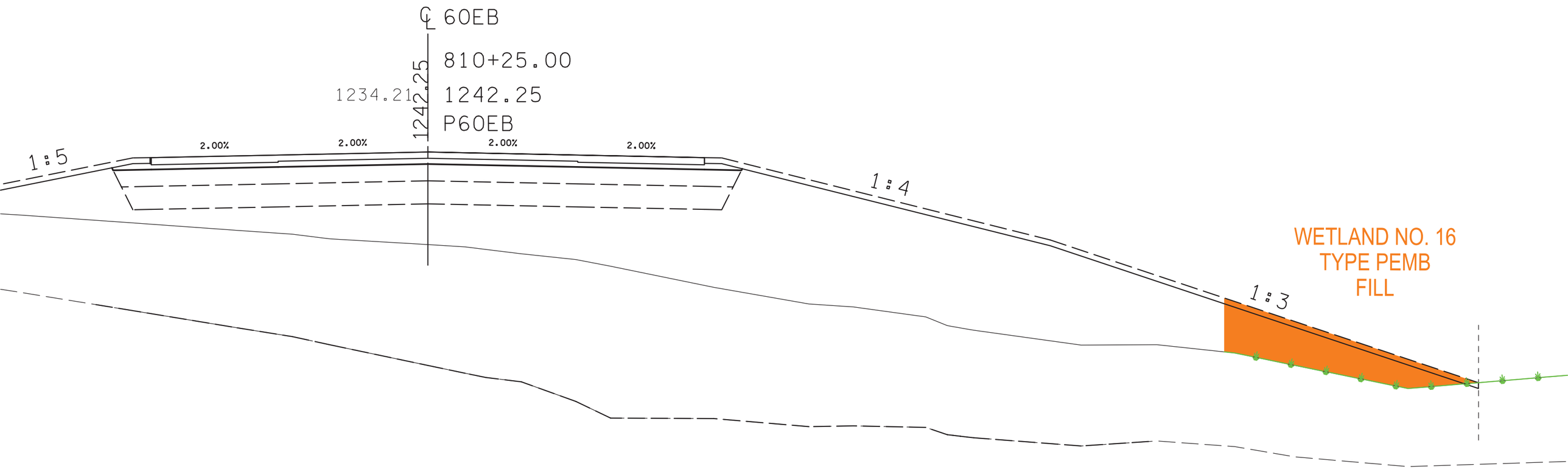
℄ 60EB
810+25.00
1234.21
1242.25
1242.25
P60EB
2.00%
2.00%
2.00%
2.00%
1:5
1:4
1:3
WETLAND NO. 16
TYPE PEMB
FILL

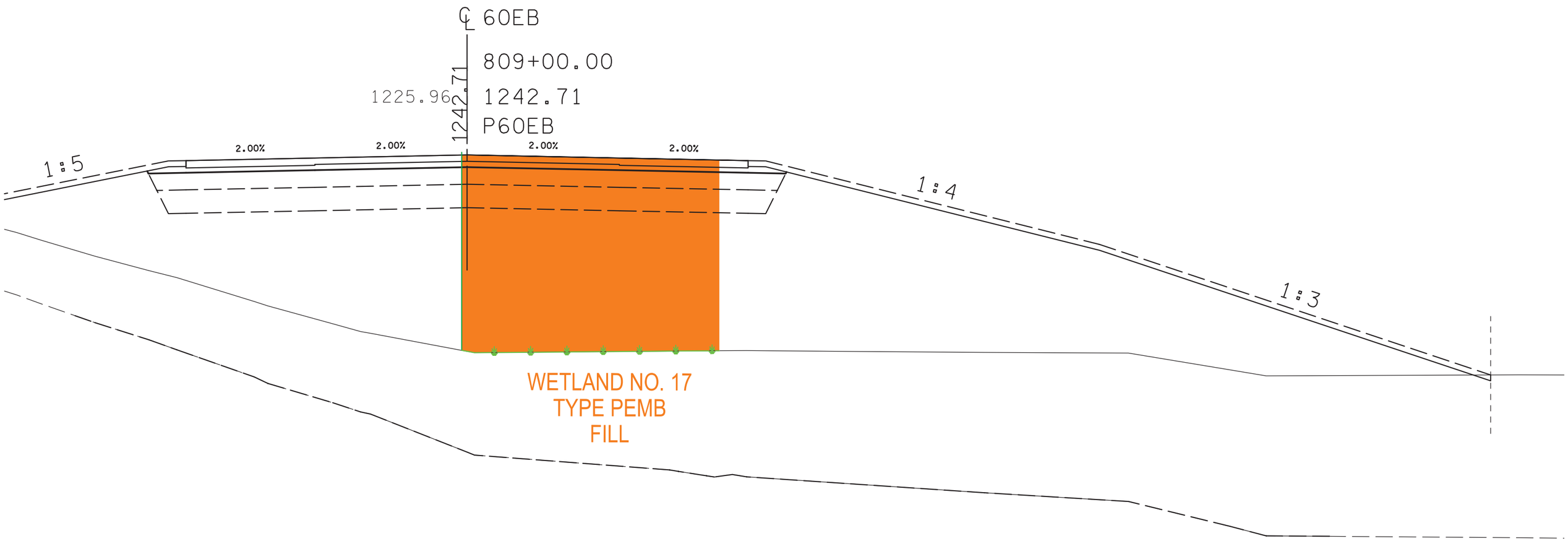
℄ 60EB
809+00.00
1225.96
1242.71
1242.71
P60EB
2.00%
2.00%
2.00%
2.00%
1:5
1:4
1:3
WETLAND NO. 17
TYPE PEMB
FILL

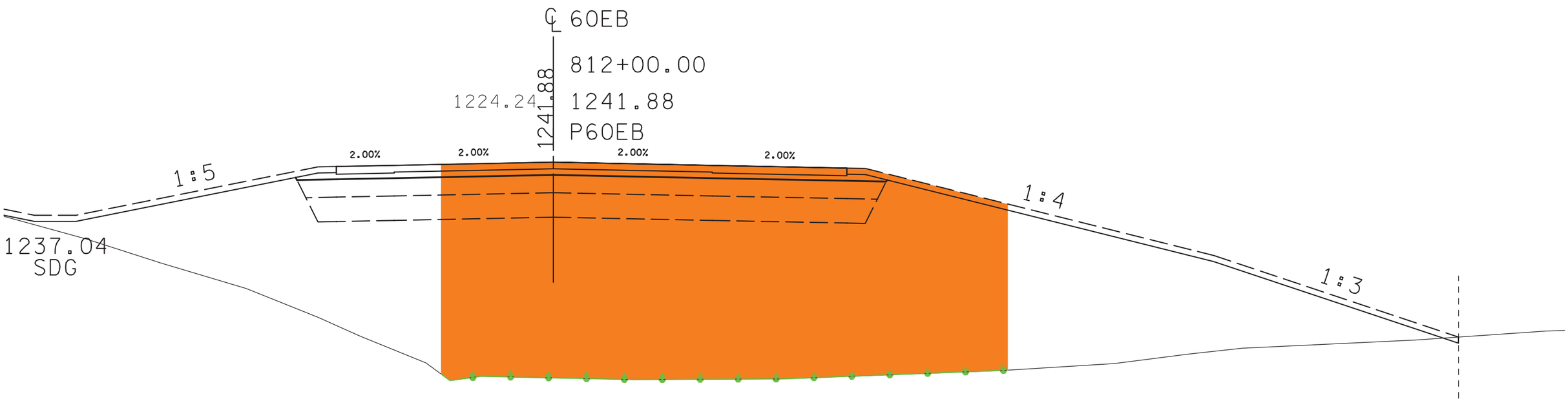

WETLAND NO. 14
TYPE PEMB
FILL

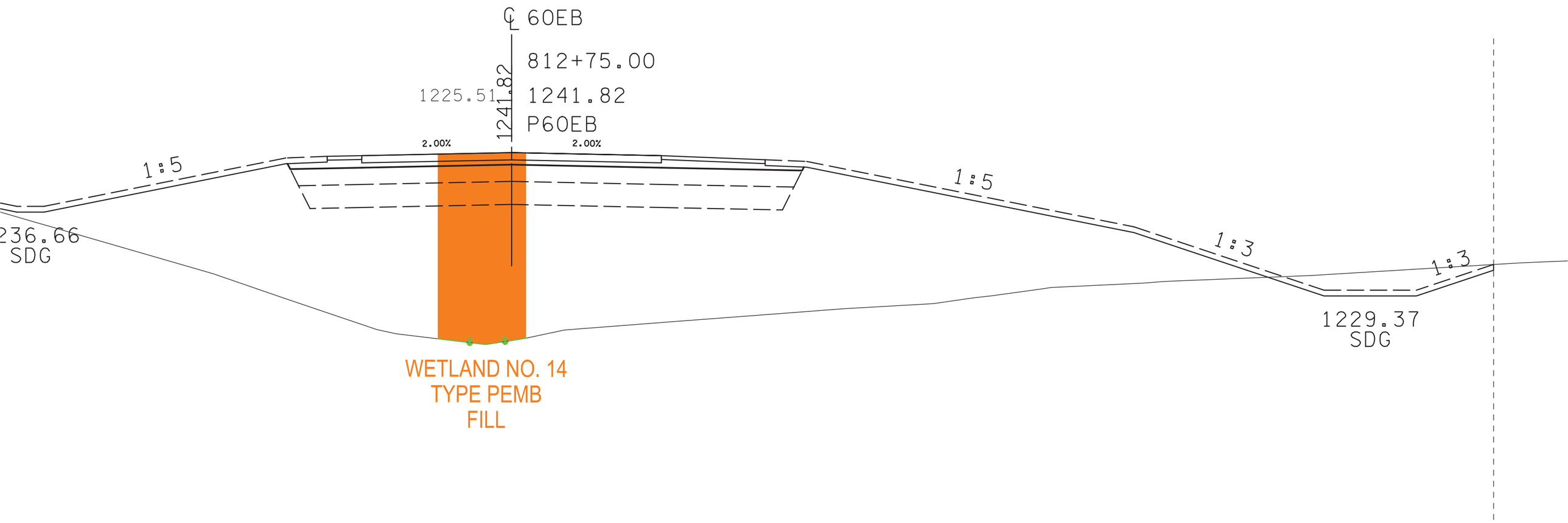
℄ 60EB
812+75.00
1241.82
1225.51
1241.82
P60EB
2.00%
2.00%
1:5
1:5
1:3
1:3
236.66
SDG
1229.37
SDG
WETLAND NO. 14
TYPE PEMB
FILL

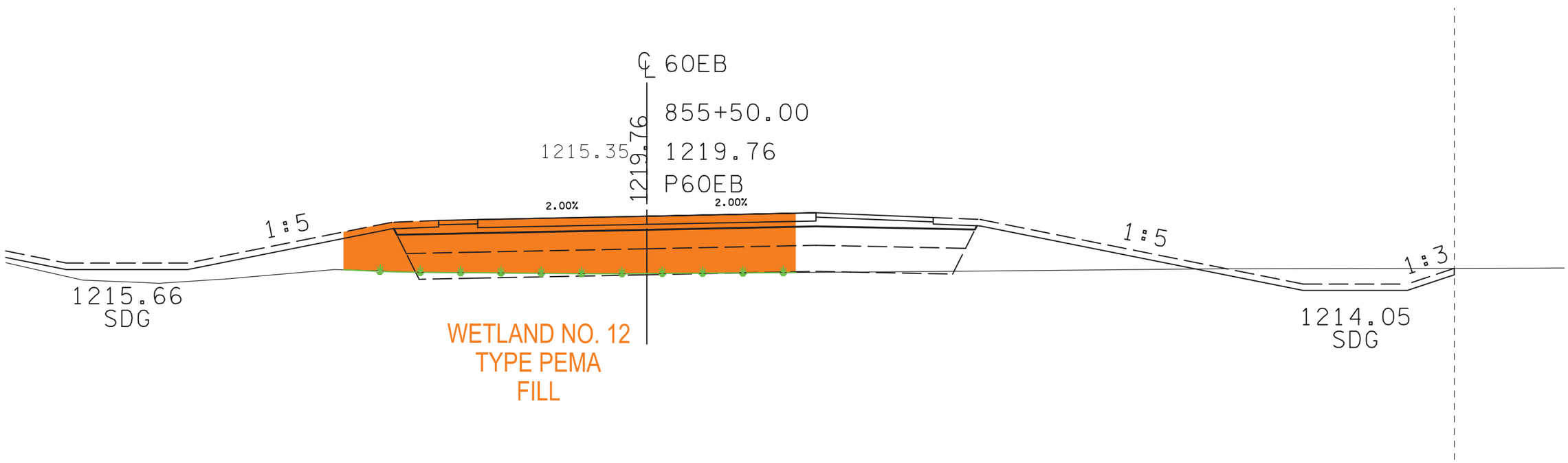
℄ 60EB
855+50.00
1215.35
1219.76
1219.76
P60EB
2.00%
2.00%
1:5
1:5
1:3
1215.66
SDG
1214.05
SDG
WETLAND NO. 12
TYPE PEMA
FILL

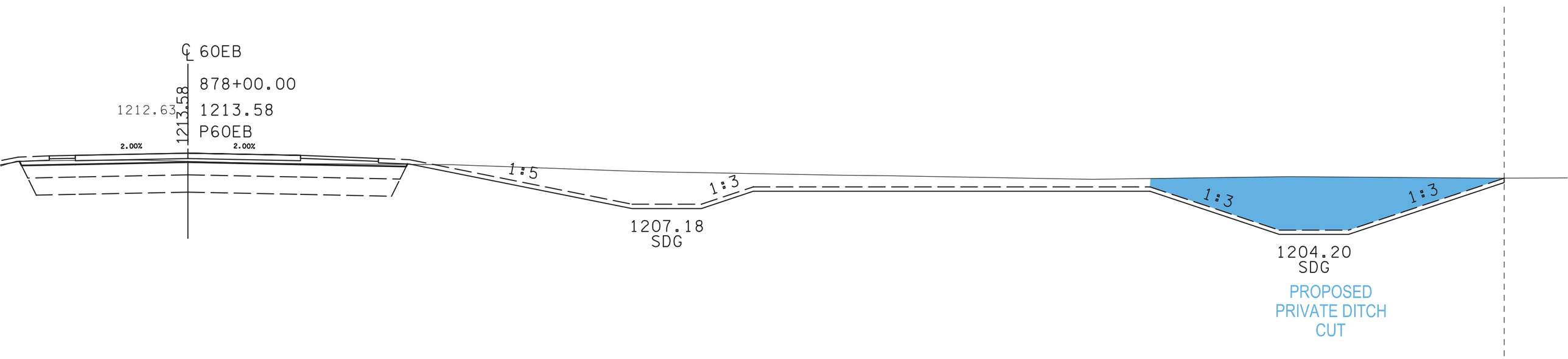
℄ 60EB
878+00.00
1212.63
1213.58
1213.58
P60EB
2.00%
2.00%
1:5
1:3
1207.18
SDG
1:3
1:3
1204.20
SDG
PROPOSED
PRIVATE DITCH
CUT

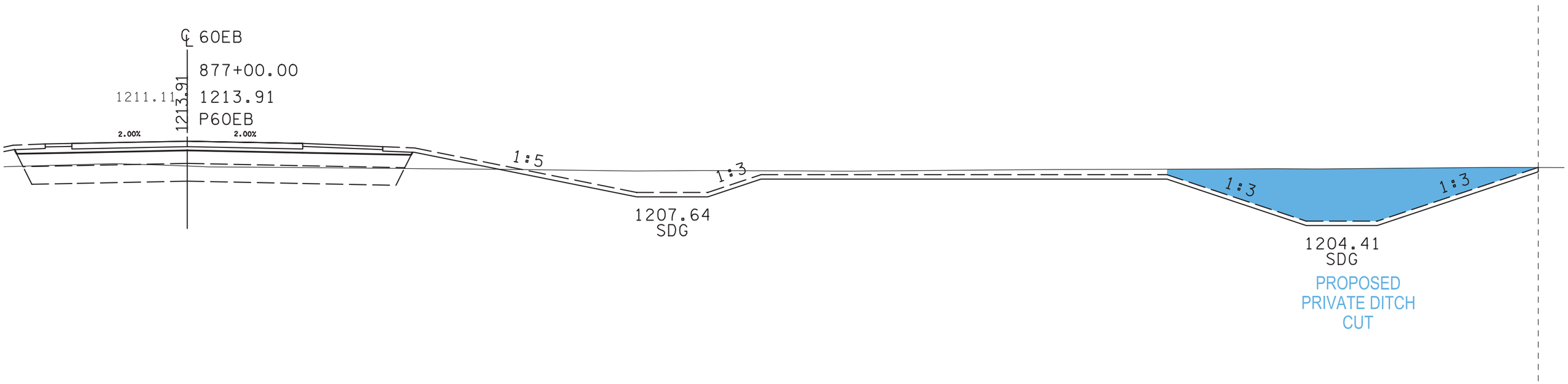
℄ 60EB
877+00.00
1211.11
1213.91
1213.91
P60EB
2.00%
2.00%
1:5
1:3
1207.64
SDG
1:3
1:3
1204.41
SDG
PROPOSED
PRIVATE DITCH
CUT

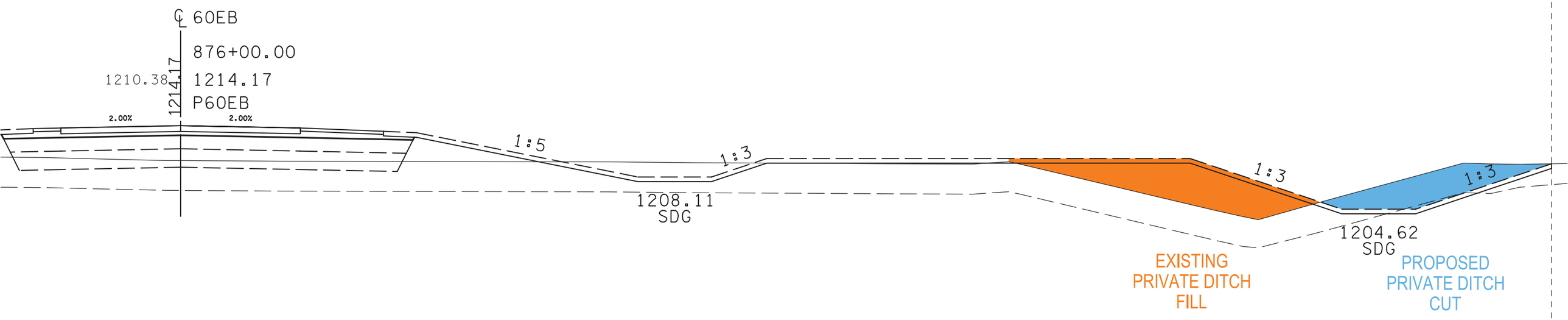
℄ 60EB
876+00.00
1210.38
1214.17
1214.17
P60EB
2.00%
2.00%
1:5
1:3
1208.11
SDG
1:3
1:3
1204.62
SDG
EXISTING
PRIVATE DITCH
FILL
PROPOSED
PRIVATE DITCH
CUT

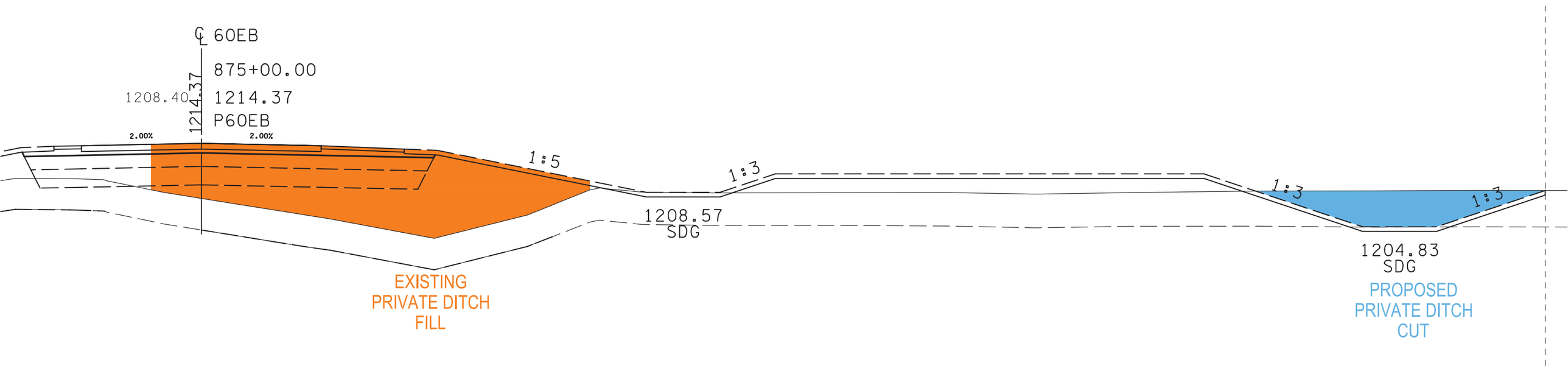
℄ 60EB
875+00.00
1208.40
1214.37
1214.37
P60EB
2.00%
2.00%
1:5
1:3
1:3
1:3
1208.57
SDG
1204.83
SDG
EXISTING
PRIVATE DITCH
FILL
PROPOSED
PRIVATE DITCH
CUT

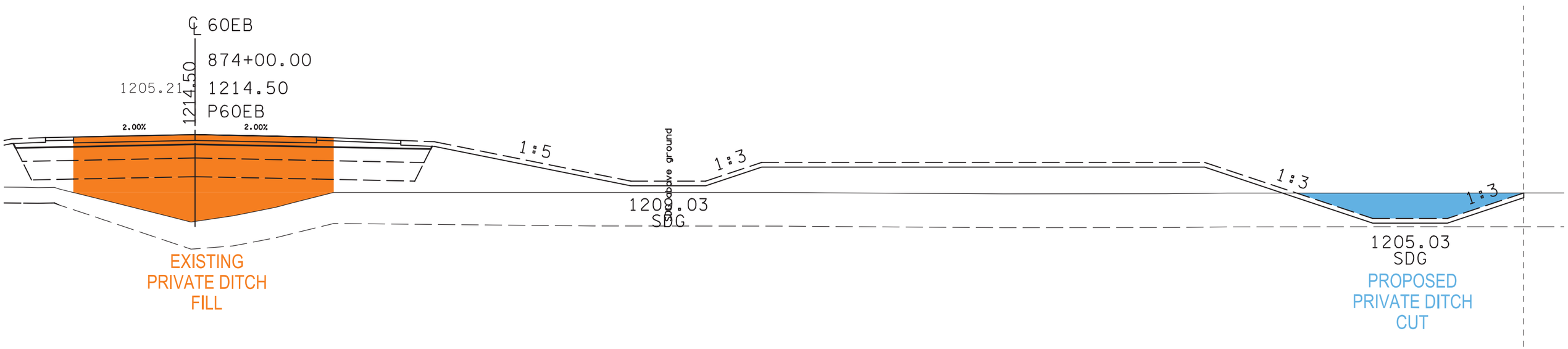

℄ 60EB
874+00.00
1205.21
1214.50
1214.50
P60EB
2.00%
2.00%
1:5
1:3
1:3
1:3
1208.03
SDG
1205.03
SDG
EXISTING
PRIVATE DITCH
FILL
PROPOSED
PRIVATE DITCH
CUT

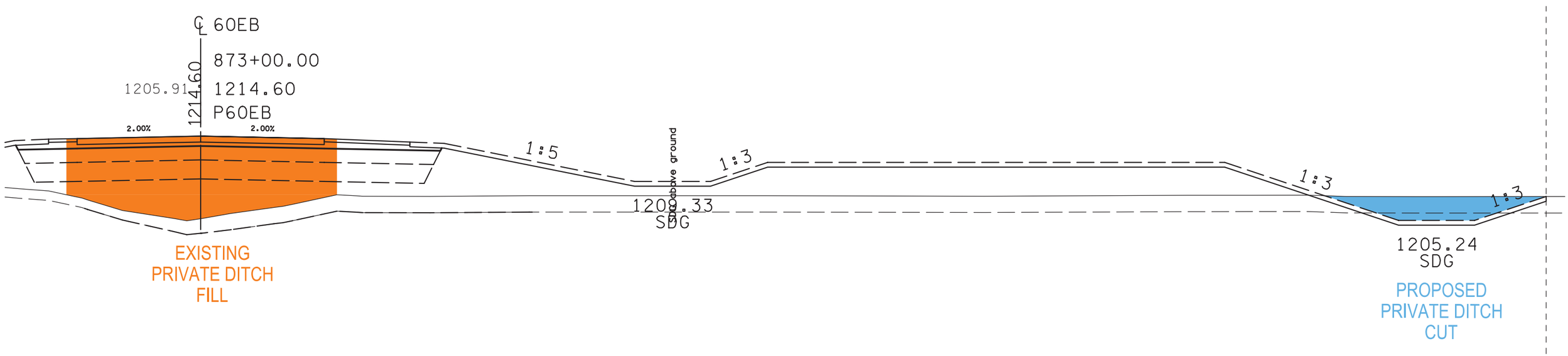
℄ 60EB
873+00.00
1205.91
1214.60
1214.60
P60EB
2.00%
2.00%
1:5
1:3
1:3
1:3
1209.33
SDG
1205.24
SDG
EXISTING
PRIVATE DITCH
FILL
PROPOSED
PRIVATE DITCH
CUT

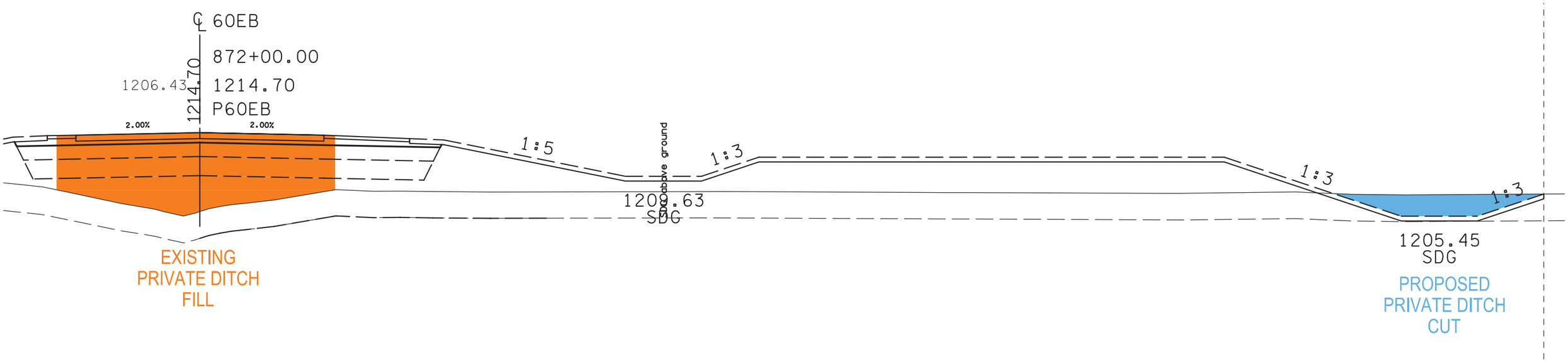
℄ 60EB
872+00.00
1206.43
1214.70
1214.70
P60EB
2.00%
2.00%
1:5
1:3
1:3
1:3
1209.63
SDG
1205.45
SDG
EXISTING
PRIVATE DITCH
FILL
PROPOSED
PRIVATE DITCH
CUT

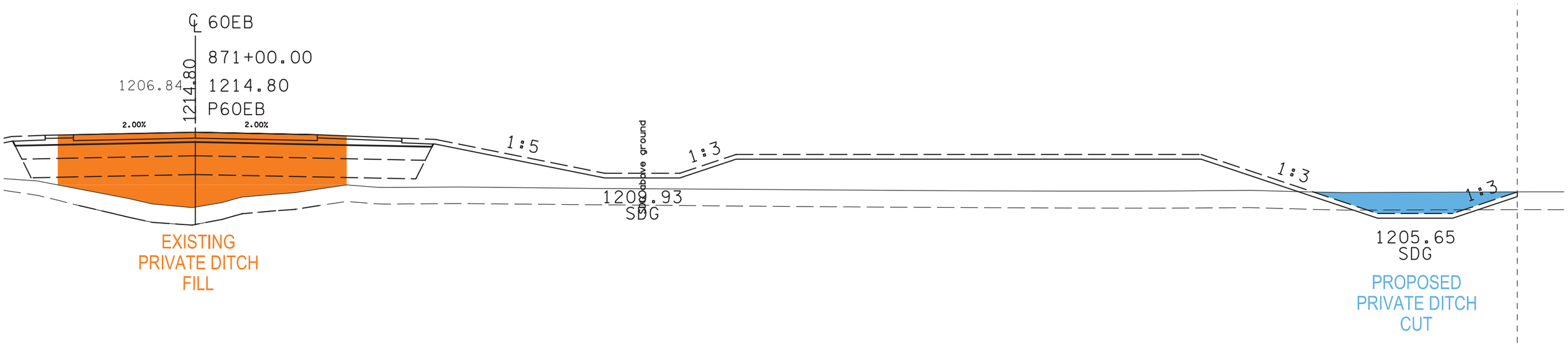
℄ 60EB
871+00.00
1206.84
1214.80
1214.80
P60EB
2.00%
2.00%
1:5
1:3
1:3
1:3
1200.93
SDG
1205.65
SDG
EXISTING
PRIVATE DITCH
FILL
PROPOSED
PRIVATE DITCH
CUT

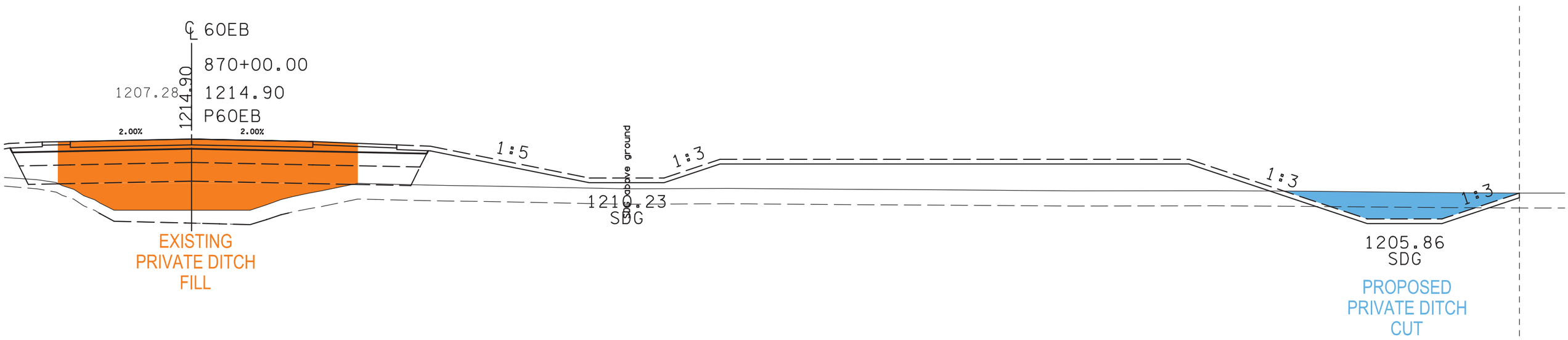
℄ 60EB
870+00.00
1207.28
1214.90
1214.90
P60EB
2.00%
2.00%
1:5
1:3
1:3
1:3
1210.23
SDG
1205.86
SDG
EXISTING
PRIVATE DITCH
FILL
PROPOSED
PRIVATE DITCH
CUT

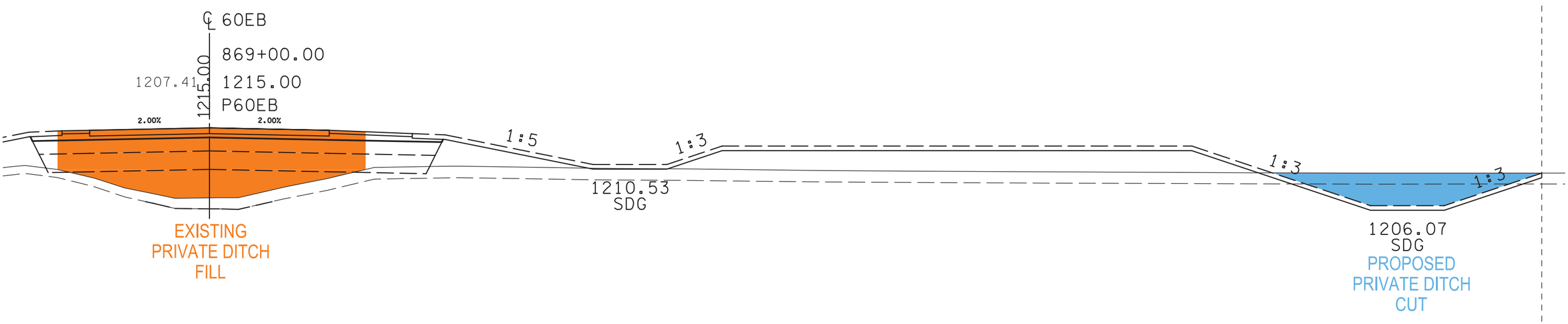
℄ 60EB
869+00.00
1207.41
1215.00
1215.00
P60EB
2.00%
2.00%
1:5
1:3
1:3
1:3
1210.53
SDG
1206.07
SDG
EXISTING
PRIVATE DITCH
FILL
PROPOSED
PRIVATE DITCH
CUT

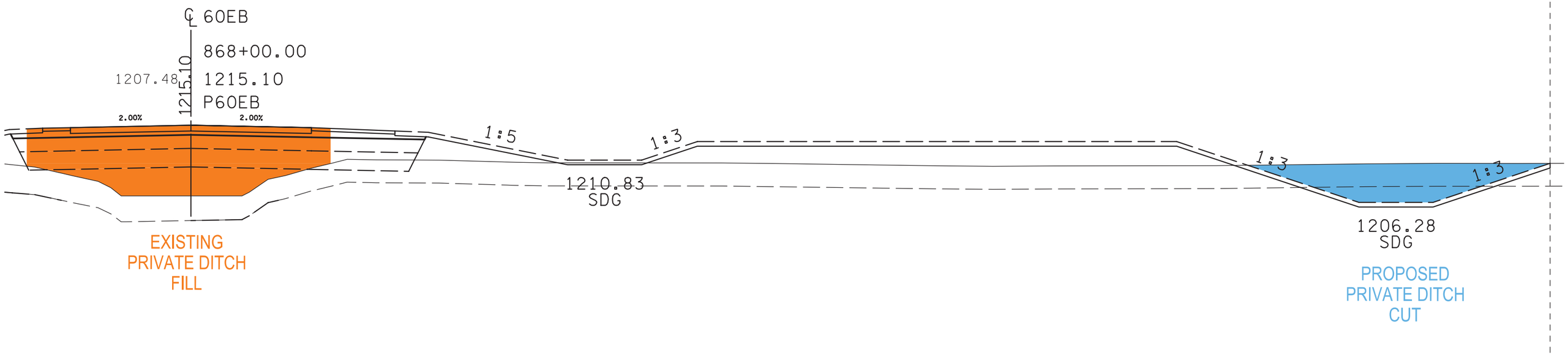
℄ 60EB
868+00.00
1207.48
1215.10
1215.10
P60EB
2.00%
2.00%
1:5
1:3
1:3
1:3
1210.83
SDG
1206.28
SDG
EXISTING
PRIVATE DITCH
FILL
PROPOSED
PRIVATE DITCH
CUT

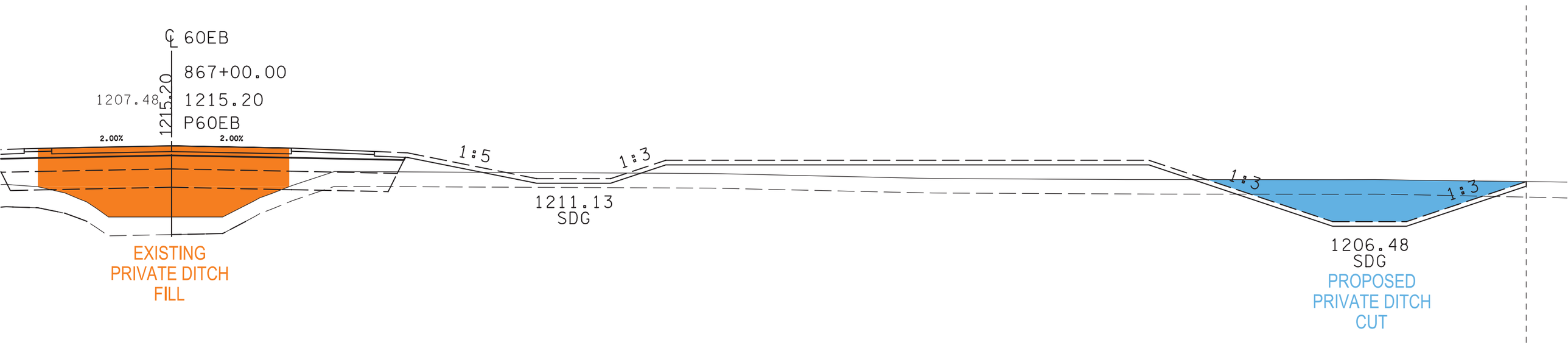
℄ 60EB
867+00.00
1207.48
1215.20
1215.20
P60EB
2.00%
2.00%
1:5
1:3
1:3
1:3
1211.13
SDG
1206.48
SDG
EXISTING
PRIVATE DITCH
FILL
PROPOSED
PRIVATE DITCH
CUT

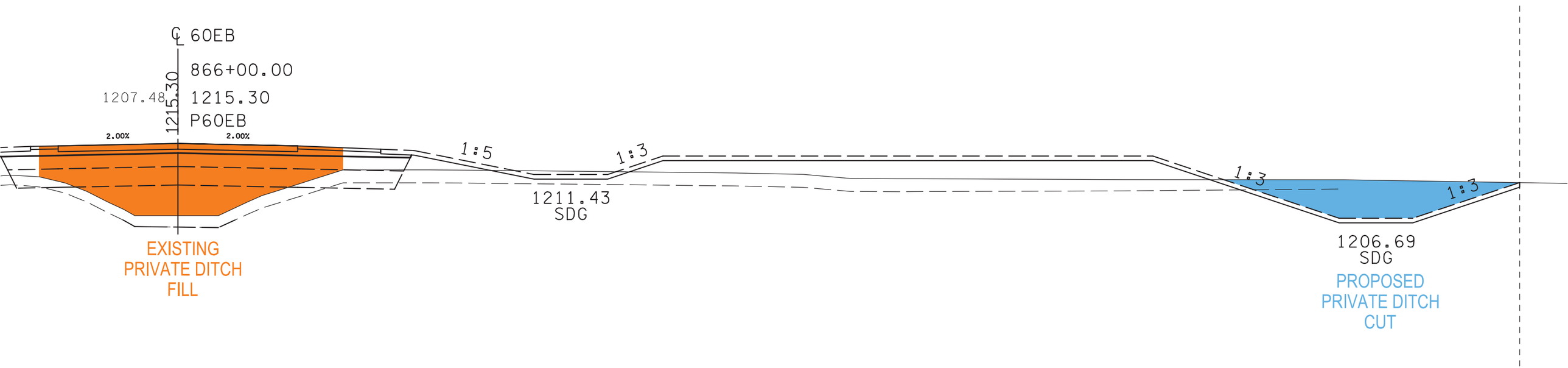
℄ 60EB
866+00.00
1207.48
1215.30
1215.30
P60EB
2.00%
2.00%
1:5
1:3
1:3
1:3
1211.43
SDG
1206.69
SDG
EXISTING
PRIVATE DITCH
FILL
PROPOSED
PRIVATE DITCH
CUT

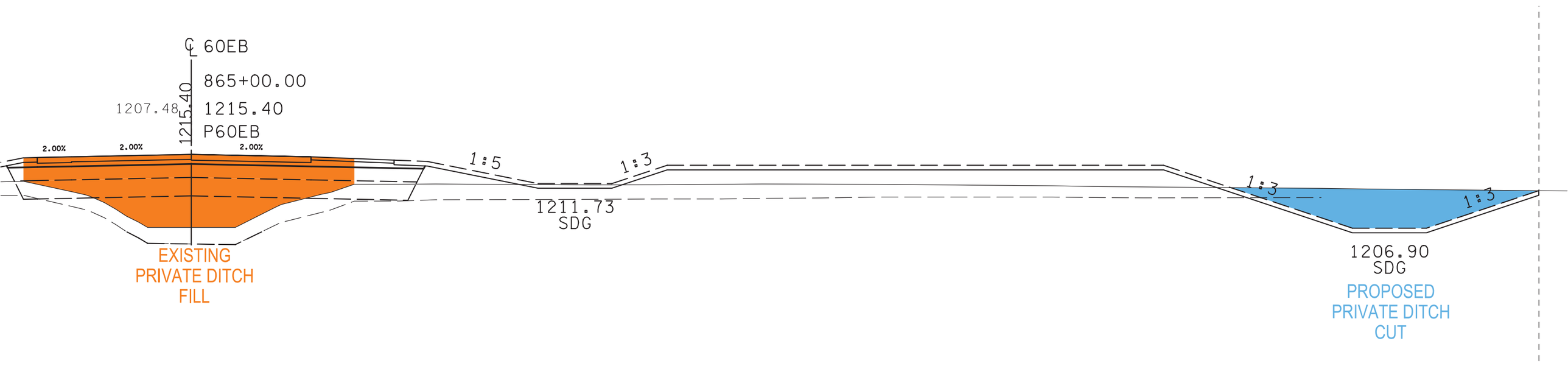
℄ 60EB
865+00.00
1207.48
1215.40
1215.40
P60EB
2.00%
2.00%
2.00%
1:5
1:3
1:3
1:3
1211.73
SDG
1206.90
SDG
EXISTING
PRIVATE DITCH
FILL
PROPOSED
PRIVATE DITCH
CUT