Flood Flight Handbook

US Army Corps of Engineers®
St. Paul District

2016 Edition

Flood Fight Handbook

Table of Contents

SECTION 1: FLOOD PREPAREDNESS OVERVIEW 1

SECTION 2: SANDBAGGING FOR FLOOD PROTECTION 3

2.1 Sandbag Size and Fill Materials 3

2.2 Site Selection and Preparation 4

2.3 Stacking Sandbags to Form a Levee 5

2.4 Sealing the Levee 6

2.5 Number of Sandbags Needed 9

SECTION 3: EARTH FILL LEVEES 11

3.1 Foundation Preparation 11

3.2 Levee Fill 11

3.3 Levee Design Section 12

3.4 Erosion Protection for Emergency Levees 13

3.5 Flashboard and Box Levee Barriers 14

3.6 Closures 15

SECTION 4: INTERIOR DRAINAGE TREATMENT 17

4.1 Preliminary Work 17

4.2 Pumps: Types, Sizes and Capacities 17

4.3 Determination of Pumping Requirements for Storm Water Runoff 19

4.4 Determination of Pumping Requirements for Sewer Systems 21

4.5 Metal Culverts 23

SECTION 5: FLOOD FIGHT PROBLEMS 25

5.1 Definitions 25

5.2 Overtopping 27

5.3 Breaches 27

5.4 Seepage 27

5.5 Sand Boils 28

5.6 Erosion 29

5.7 Sewer-Related Problems 29

5.8 Other Causes of Levee Failure 30

5.9 Interior Flooding 31

SECTION 6: LIST OF RESOURCES AND HYPERLINKS 33

SECTION 7: PLATES SHOWING EMERGENCY FLOOD CONTROL ACTIVITIES 35

PLATE 1: Recommended Method for Sandbag Levee Construction

PLATE 2: Recommended Methods for Anchoring Polyethylene Sheeting at the Levee Toe

PLATE 3: Alternate Method for Anchoring Polyethylene Sheeting at the Levee Toe (when placed in the dry)

PLATE 4: Recommended Method for Placement of Polyethylene Sheeting on Temporary Levees (when placed in the dry)

PLATE 5: Recommended Method for Placement of Polyethylene Sheeting on Temporary Levees (when placed in the wet)

PLATE 6: Recommended Method for Flashboard and Box Levees

PLATE 7: Recommended Method for Plugging Pipes

PLATE 8: Recommended Method for Adapting Manhole for Pumping, Method 1

PLATE 9: Recommended Method for Adapting Manhole for Pumping, Method 2

PLATE 10: Recommended Method for Ringing Sand Boils

List of Figures

Figure 1	Correct and incorrect sandbag preparation.	3
Figure 2	Proportions of Sandbag Levee showing Bonding Trench at base.	4
Figure 3	Overlap sandbags lengthwise and parallel to river flow.	5
Figure 4	Correct and incorrect placement of staggered sandbag layers.	5
Figure 5	Preferred method of tucking under and anchoring poly with two rows of sandbags.	6
Figure 6	Poly edge placed over dirt and anchored with a row of sandbags.	7
Figure 7	Poly anchored within a trench – placed under dry conditions.	7
Figure 8	Poly placement from downstream to upstream with overlap shown.	8
Figure 9	Appropriate flooding descriptions that should used to correspond to the levee responses to rising water.	24
Figure 10	Possible results when levee is overtopped.	25
Figure 11	Levee failure without overtopping.	26

List of Tables

Table 2.1	Estimated number of sandbags needed per foot of length and height of levee	9
Table 4.1	Crisafulli Pumps	18
Table 4.2	Flygt Centrifugal Pumps (Submersible)	18
Table 4.3	Values of K for Computation of Pumping	19
Table 4.4	Values of M for Adjustment to Pumping	19
Table 4.5	Matching Sewer Pipe Size to Pump Size	21
Table 4.6	Typical Pump Discharge Capacities for Ag. Pumps	22
Table 4.7	Flow Capacity of Clay Sewer Pipe on two different slopes (S)	22

This page intentionally left blank

Section 1: Flood Preparedness Overview

Floods can happen at any time. Common causes include high river levels due to spring snow melt and heavy rain storms. There are many flood preparedness steps that can be taken to increase protection and reduce severity of impact on your home, business, and family.

This handbook describes engineering-related solutions to protect structures from flooding. It will help you determine what supplies and materiel to have on hand, as well as provide detailed guidance on implementing the different solutions.

The three main areas covered in the handbook are sandbag levees (Section 2), earth fill levees (Section 3), and interior drainage (Section 4). Section 5 identifies issues that may be encountered as well as guidance on how to deal with each issue.

There are many excellent sources of information for other areas of preparedness (e.g. family emergency plans, protection of the interior/contents of a structure, and business continuity planning). A list of links to some of these sources can be found in Section 6. The links are only provided as suggested resources and do not constitute endorsement by the U.S. Army Corps of Engineers of the linked websites, or the information, products or services contained therein.

Section 7 includes ten plates with visual diagrams and specifications. These can be used as quick references for personnel involved with implementing different solutions.

This page intentionally left blank

Section 2: Sandbagging for Flood Protection

Information in the following section was adapted from the North Dakota State University, Extension Service. A link to their web page is included in Section 6.

A levee is an embankment, floodwall, or structure along a water course whose purpose is flood damage reduction or water conveyance. A properly built sandbag levee can prevent or reduce flood damage. Sandbag levees are labor-intensive, have more opportunities for error during construction, and require disposal procedures after the event. However, sandbag levees do not require heavy equipment and can be constructed by small groups of individuals. Sandbag levees should be used where a very low and relatively short barrier is required or where earth fill would not be practical, such as in the freeboard range along an arterial street. They are very useful where temporary closures are required, such as roads and railroad tracks. The sandbag size, fill material used, and method of placement all influence the effectiveness of the sandbag levee.

This section describes and illustrates a number of suggested techniques for using sandbags and other materials to build temporary flood protection levees. Additional details are shown on ***Plates 1- 3*** in Section 7 of this handbook.

Information about using sandbags for erosion protection on earth fill levees can be found in Section 3.4.1.

2.1 Sandbag Size and Fill Materials

Bags must be filled and placed properly to give the best protection. Any available material can be used to fill sandbags, but sand is easiest to handle. Silt and clay will form a good levee but are more difficult to work with. Different size bags are available, but bags are easier to handle if weight is limited to between 35 and 40 pounds. This weight limit is particularly important when teenagers or older persons will be handling the bags and assisting with emergency operations and levee construction.

Typically, sandbags are filled approximately half full and do not need to be tied, although they may be tied loosely near the top. It is desired that the sandbags lay flat when placed. Overfilled bags reduce the levee's effectiveness by leaving gaps between the bags, allowing water to seep through. ***Figure 1*** illustrates the correct and incorrect ways to prepare sandbags. Tying is not required for a correctly filled sandbag.

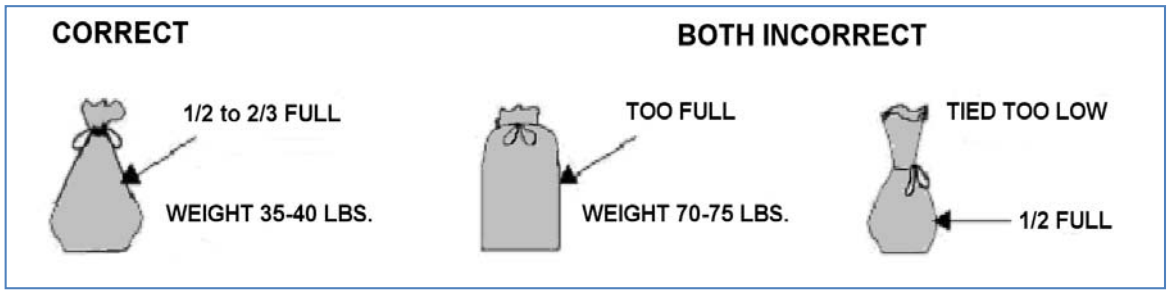

Figure 1: Correct and incorrect sandbag preparation.

Ordinarily, filling sandbags is a two- or three-person operation. One member of the team should place the bottom of the empty bag on the ground slightly in front of wide-spread feet with arms extended. This

person may also want to kneel or sit to avoid back strain from bending. The throat of the bag is folded outward about one and one-half inches to form a collar and held in that position to allow a second team member to empty a shovelful of material into the open end, until the bag is one-half to two-thirds full. The third team member stacks and stockpiles the filled sandbags. Gloves should be used to avoid injury, and safety goggles are desirable during dry and windy days. For larger operations, bag-holding racks and funnels on the back of dump trucks, and other power loading equipment can be used to expedite the filling operation.

Contact your county emergency office for information on where to obtain sandbags.

2.2 Site Selection and Preparation

When selecting the location for a levee, consider the ground elevation, ground condition, obstructions, and alignment. For stability, the levee should be kept as short and low as possible. Avoid any obstructions that would weaken the levee, and do not build the levee against a building wall unless the wall has been designed to retain floodwaters. If possible, plan to leave at least 8 feet between the landward toe / base of the levee and any building or obstructions to allow for future levee raises, levee monitoring, construction equipment and vehicles, and to prevent damage to building walls and foundations.

Remove all ice and snow from a strip of land at least as wide as the base of the levee. If the levee will be more than 2-3 feet high, remove a strip of sod to create a bonding trench along the center line of the alignment to better anchor the levee in place, as shown in ***Figure 2.***

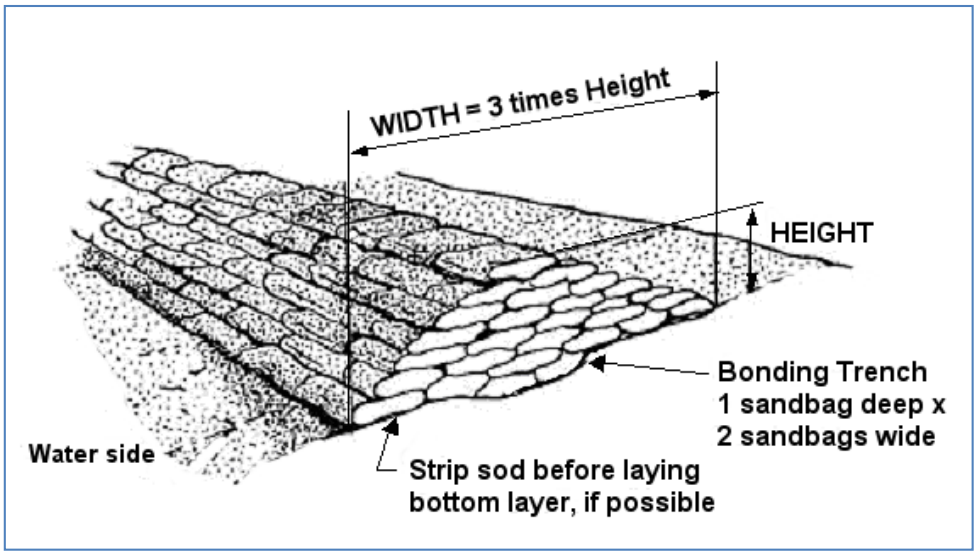

Figure 2 – Proportions of sandbag levee showing bonding trench at base.

2.3 Stacking Sandbags to Form a Levee

Overlap the sandbags as shown in ***Figure 3***, placing the first layer of bags lengthwise along the levee and lapping the bags so the filled portion of one bag lies on the unfilled portion of the previous bag.

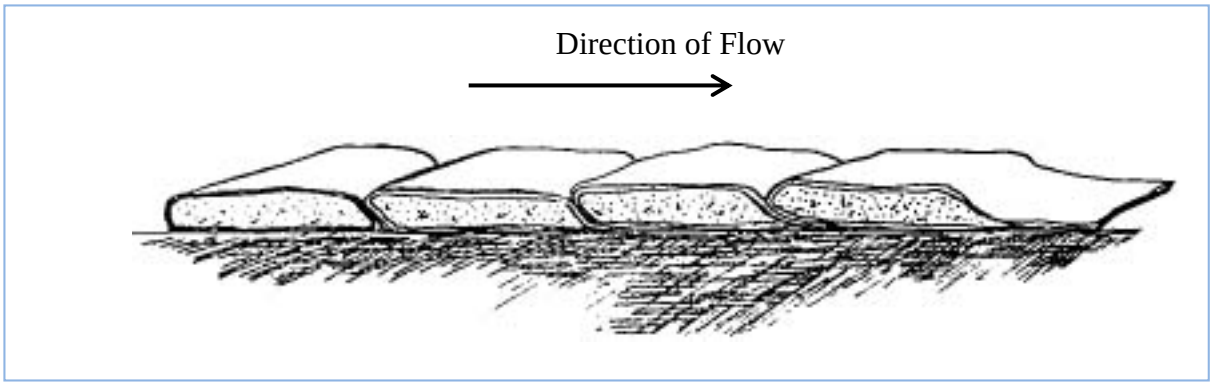

Figure 3 – Sandbag placement

The bags should be placed lengthwise and overlapped parallel to the direction of the river flow. The bonding trench shown in ***Figure 2*** should be filled with a layer that is two sandbags wide by one sandbag high; the first full layer is then placed over this bonding trench. The base of the levee should be three times as wide as the levee is high.

The second layer of bags should be staggered perpendicular to the first layer and placed over the seams of the previous layer, with additional layers laid in alternating directions to the top of the levee, as shown in the "Correct" example in ***Figure 4***. By alternating placement directions, the gaps and seams along the edges and corners in each layer below will be covered and filled in by a sandbag in the next overlying layer. ***Plate 1*** in Section 7 of this handbook illustrates additional details of sandbag placement.

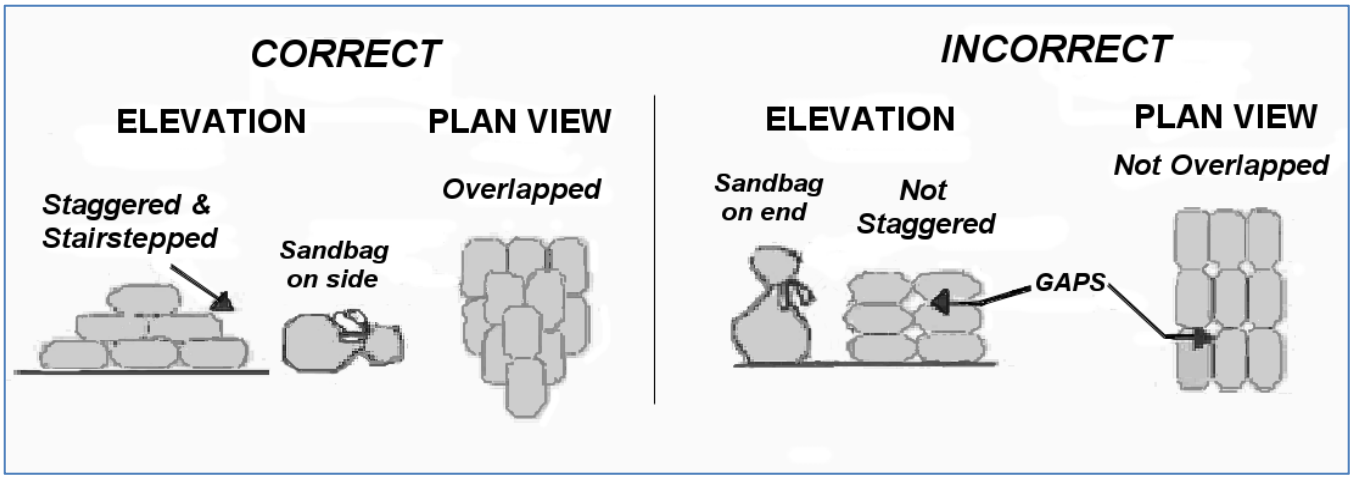

Figure 4 – Correct and incorrect placement of staggered sandbag layers.

2.4 Sealing the Levee

The finished levee can be sealed with a sheet of polyethylene plastic (poly) to improve water tightness. The poly sheeting should be about 6 mils thick, and is generally available in 20-foot-wide by 100-foot-long rolls from construction supply firms, lumberyards, and farm stores.

2.4.1 **Anchoring**. The poly must always be anchored at the bottom edge and weighted along the top and slope to be effective. Three methods are recommended to anchor the poly on the riverward face of a sandbag levee.

The most successful anchoring method is to place the poly flat on the ground surface extending away from the bottom row of sandbags, and then place one or more rows of sandbags over the flap. The poly should then be unrolled over the anchoring row of sandbags, anchored again, and then up the slope and over the top of the sandbag levee, far enough to allow for anchoring with additional sandbags. This method is illustrated in ***Figure 5*** and shown on ***Plate 2*** in Section 7 of this handbook.

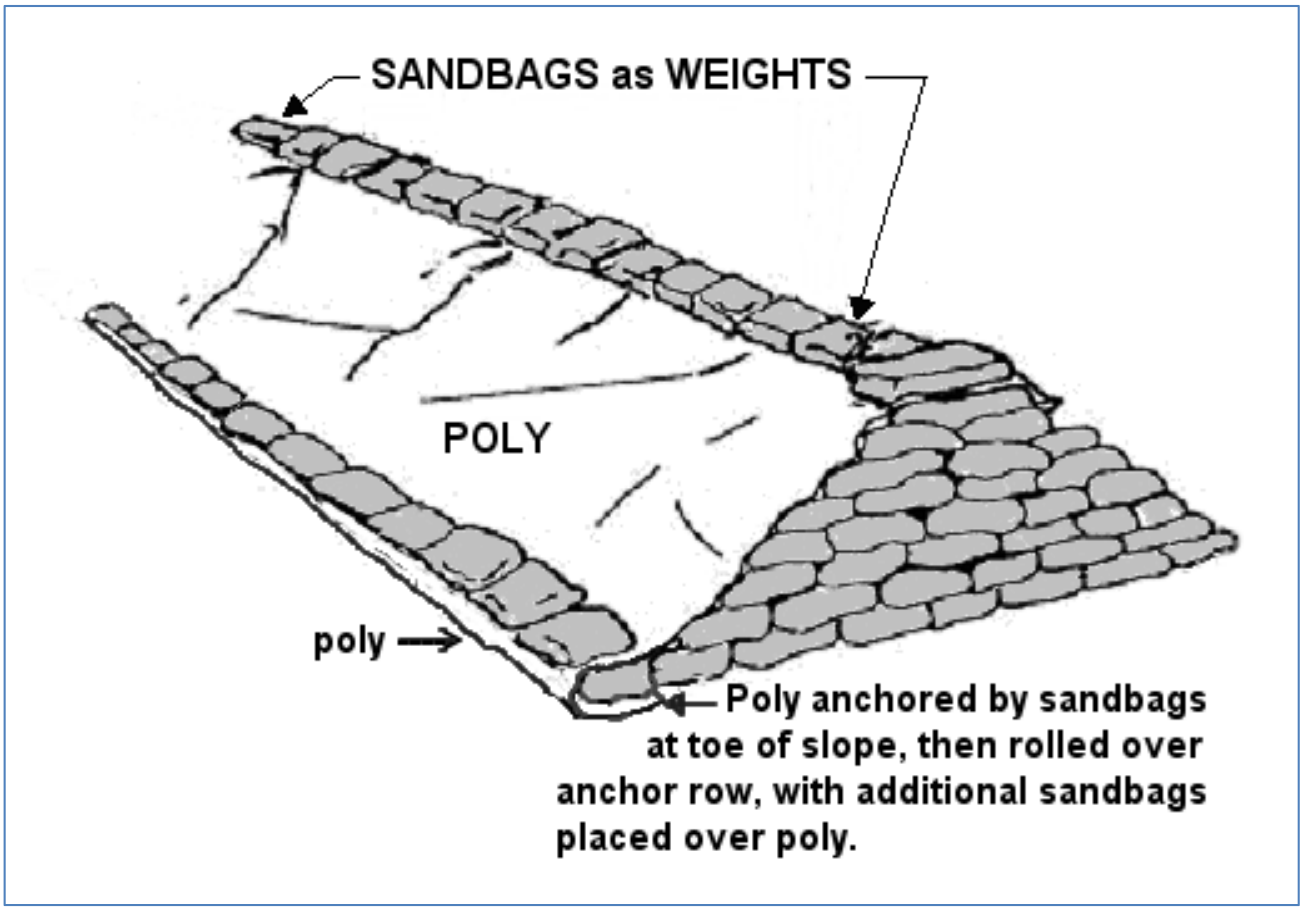

Figure 5 – Preferred method of tucking and anchoring poly with two rows of sandbags

An alternate method to anchor poly is to spread a layer of dirt or sand one inch deep and about one foot wide along the base of the levee on the water side, to create a uniform surface to anchor the poly. Lay the poly sheeting so the bottom edge extends one to two feet beyond the bottom edge of the sandbags over the loose dirt, and then place sandbags over the edge of the poly to anchor. This method is illustrated in ***Figure 6*** and included on ***Plate 2*** in Section 7 of this handbook.

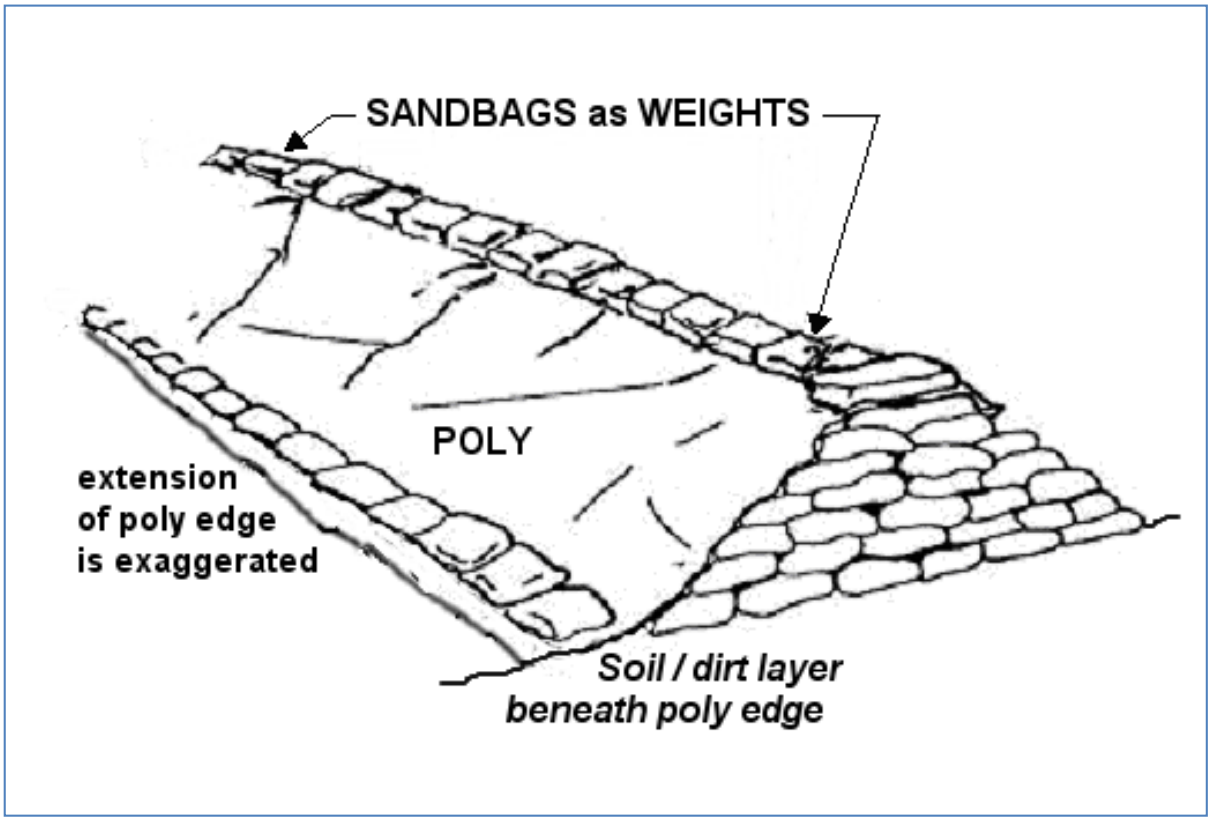

Figure 6 – Poly edge placed over dirt and anchored with a row of sandbags.

A third method to anchor the poly is to excavate a 6-inch or deeper trench along the toe of the levee, place poly in the trench, and backfill the trench, compacting the backfill material or placing a row of sandbags over the trench to prevent loss of the backfill material. This method, illustrated in ***Figure 7,*** will be unsuitable if water levels have reached the sandbags at the toe of the levee.

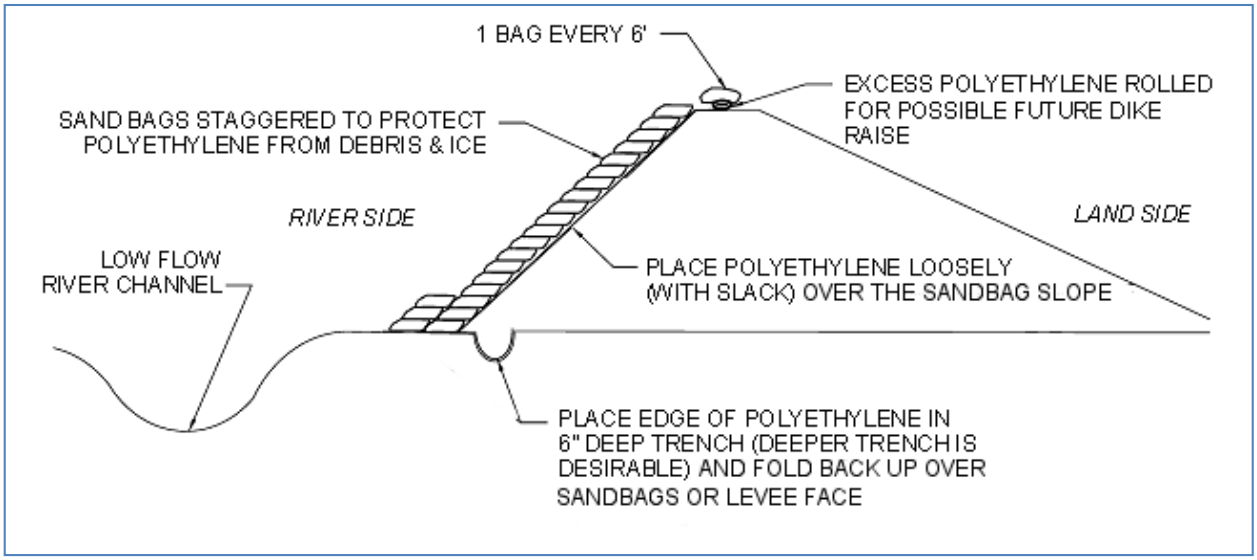

Figure 7 – Poly anchored within a trench (placed under dry conditions).

2.4.2 **Placement**. Poly should be placed from downstream to upstream along the slopes and the next sheet upstream overlapped by at least 3 feet, as shown on ***Figure 8.*** Overlapping in this direction prevents the current from flowing under the overlap and tearing the poly loose. After the poly is anchored in place, it should be unrolled up the slope and over the top. Lay the poly sheeting down very loosely, as the pressure of the water will make the poly conform easily to the sandbag surface if the poly is loose. If the poly is stretched too tightly the force of the water could puncture the poly.

2.4.3 **Weighting.** Once the poly is anchored and unrolled, additional sandbags, boards, and/or loose dirt should be used as weights along the top of the levee to keep the poly in place and prevent the wind or river current from disturbing it. These weights are not shown on the illustration. Avoid puncturing the poly with sharp objects or by walking on it.

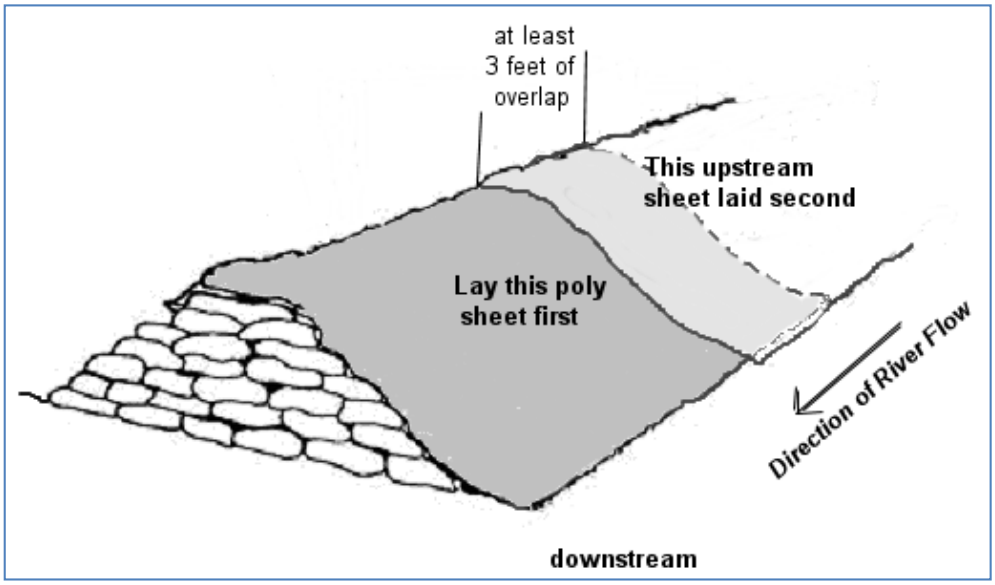

Figure 8 – Poly placement from downstream to upstream with overlap shown.

2.5 Number of Sandbags Needed

The information in ***Table 2.1*** indicates the approximate number of sandbags that are needed for levees of various heights and lengths. Note that 5 feet high is the practical limit of a sandbag levee. If a higher sandbag levee is needed, alternative means of construction should be considered. The preferred height limit is 3 feet.

Estimated Number of Sandbags Per Linear Foot of Levee	
Height in Feet	Bags Required
1	6
2	21
3	45
4	78
5	120

LEVEE HEIGHT	Number of Sandbags Required For Length of Levee									
	50 FT	100 FT	175 FT	200 FT	250 FT	300 FT	350 FT	400 FT	450 FT	500 FT
1 Foot	300	600	1,050	1,200	1,500	1,800	2,100	2,400	2,700	3,000
2 Feet	1,050	2,100	3,675	4,200	5,250	6,300	7,350	8,400	9,450	10,500
3 Feet	2,250	4,500	7,875	9,000	11,250	13,500	15,750	18,000	20,250	22,500
4 Feet	3,900	7,800	13,650	15,600	19,500	23,400	27,300	31,200	35,100	39,000
5 Feet	6,000	12,000	21,000	24,000	30,000	36,000	42,000	48,000	54,000	60,000

Table 2.1 - Estimated number of sandbags needed per foot of length and height of levee

This page intentionally left blank

Section 3: Earth Fill Levees

Earth fill levees rather than sandbag levees are the preferred type of emergency flood barrier for large scale flood fights, and their construction should be directed by experienced flood fight workers.

3.1 Foundation Preparation

Prepare the levee footprint as follows prior to placing fill:

- Remove snow from the ground surface and place snow on riverside of levee to eliminate ponding of water behind levee when snow melts.
- Trees should be cut and the stumps removed
- All obstructions above the ground surface should be removed, if possible. This will include brush, structures, snags, and similar debris.
- The foundation should then be stripped of topsoil and surface humus, if possible. Any material removed should be pushed landward of the toe of levee and windrowed.
- Stripping may be impossible if the ground is frozen; in this case, the foundation should be ripped or scarified, if possible, to provide a tough surface for bond with the embankment.

NOTE: Clearing and grubbing, structure removal and stripping should be performed only if time permits.

Every effort should be made to remove all ice or frozen ground. Frost or frozen ground can give a false sense of security in the early stages of a flood fight. It can act as a rigid boundary and support the levee; however, on thawing, soil strength may be reduced sufficiently for cracking or development of slides. It also forms an impervious barrier to prevent seepage. This may result in a considerable build up in pressure under the soils landward of the levee, and, upon thawing, pressure may be sufficient to cause sudden failure of the foundation material resulting in piping , slides, and boils. If the ground is frozen, it must be monitored, and one must be prepared to act quickly if sliding or boiling starts.

3.2 Levee Fill

Earth fill materials for emergency levees will come from local borrow areas. An attempt should be made to use materials that are compatible with the foundation materials as explained below. However, due to time limitations, any local materials may be used if reasonable construction procedures are followed. The materials should not contain large frozen pieces of earth.

Clay Fill: The majority of earth fill levees erected in recent floods consisted of clay or predominantly clay materials. Clay is preferred because the cross-section width can be made smaller with steeper side slopes. Clay is also relatively impervious and has a relatively high resistance to erosion in a compacted state. A disadvantage in using clay is that adequate compaction is difficult to obtain without proper equipment. Another disadvantage is that if the clay is wet, subfreezing temperatures may cause the material to freeze in the borrow pit and in the hauling equipment. Cold and wet weather could cause delays and should definitely be considered in the overall construction effort.

Sand Fill: If sand is used, the cross-section of the levee should comply as closely as possible with recommendations described in the following design section. Flat slopes are important. Steep slopes, without poly coverage, will allow seepage through the levee, creating high outflow on the landward slope and may cause slumping of the slope and eventual failure.

Silt: Material that is primarily silt should be avoided. If it must be used, poly sheeting must always be applied to the river slope. When silt gets wet, it tends to collapse under its own weight and is very susceptible to erosion.

3.3 Levee Design Section

The dimensions of the levee design section are generally dictated by the foundation soils and the materials available for construction. Therefore, even under emergency conditions, an attempt should be made to make the embankment compatible with the foundation. Information on foundation soils should be requested and considered, if available from local officials or engineers. The three foundation conditions and the levee design sections described below are classical and idealized, and assume a sand foundation, a clay foundation, or a thin clay layer over sand foundation. Actual field conditions generally depart from the ideals to various degrees. However, the described levee design sections for each foundation should be used as a guide to reduce the likelihood of serious flood fight problems during high water.

In determining the top width of any type of section, consideration should be given to whether a revised flood level forecast will require additional fill to be placed. A top width adequate for construction equipment will facilitate raising the levee. Finally, actual levee construction will, in many cases, depend on available time, materials, and right-of-way access.

1. **Sand Foundation –** Pervious and permeable (readily allowing water to pass through).

   a. ***Sand Section:*** Use a ratio of 1V (V=Vertical) to 3H (H=Horizontal) on the riverside slopes, and a ratio of 1V to 5H on the landward slope, with a 10-foot top width.

   b. ***Clay Section:*** Use a ratio of 1V to 2-$^{1}/_{2}$H for both the riverside and landside slopes. The bottom width of the levee section should comply with creep ratio criterion; i.e., L (across bottom) should be equal to C x H; where C=9 for fine gravel and 15 for fine sand in the foundation, and H is levee height. This criterion can be met by using berms consisting of material placed on either the landward or riverward side of a levee that extends beyond the normal levee foot print. These berms are placed to control or relieve uplift pressures and lengthen the seepage path, although they will not significantly reduce the volume of seepage. Berms are not as high as the levee itself and thickness should be 3 feet or greater.

2. **Clay Foundations –** Impervious (does not allow water to pass through)

   a. ***Sand Section:*** Same as paragraph 1.a. above.

   b. ***Clay Section:*** Use a ratio of 1V to 2-1/2H for both the riverside and landside slopes.

3. **Clay Layer over Sand Foundation**

   a. ***Sand Section.*** Use the same design as paragraph 1.a. above. Additionally, a landside berm of sufficient thickness may be necessary to prevent rupture of the clay layer. The berm may be composed of sand, gravel, or clay material. Standard design of berms requires considerable information and detailed analysis of soil conditions. However, prior technical assistance may reduce berm construction requirements in any emergency situation.

   b. ***Clay Section.*** Use the same design as paragraph 1.b. above. A berm to prevent rupture may also be necessary as described in paragraph 3.a.

Proper compaction of the emergency levee is critical to stability. Use of standard compaction equipment such as a sheepsfoot roller, may not be feasible during emergency operations because of time constraints or limited equipment availability. It is expected that in most cases the only compaction available will be from hauling and spreading equipment, such as dump trucks and dozers.

3.4 Erosion Protection for Emergency Levees

Erosion (sometimes referred to as scour) protection may be required for earth fill levees. Factors that influence whether or not additional erosion protection is required include levee material (clay levees tend to be much more resistant to erosion than sand levees), channel velocities, presence of ice and/or debris in channel, wave action, and seepage. Methods of protecting levee slopes are numerous and varied. However, during a flood emergency, time, availability of materials, cost, and construction capability may limit the use of certain accepted methods of permanent slope protection.

Field personnel must decide the type and extent of slope protection the emergency levee will need. Several methods of protection have been established that prove highly effective in an emergency. Resourcefulness on the part of the field personnel may be necessary for success. The following is a brief summary of some of the options for providing emergency erosion protection for levees.

3.4.1 Polyethylene and Sandbags. A combination of polyethylene (poly) and sandbags has proven to be one of the most expedient, effective and economical methods of combating slope erosion on earth fill levees.

Anchoring the poly along the riverward toe is important for a successful job. Anchoring methods for poly on sandbag levees, described in Section 2.4.1, should be used for earth fill levees as well.

Ideally, poly and sandbag protection should be placed before water has reached the toe of the levee. However, wet placement may be required due to rising river levels or to replace or maintain damaged poly or poly displaced by the action of the current. Placement of poly on earth fill levees is the same as placement on sandbag levees, as described in Section 2.4.2.

It is mandatory that poly placed on levee slopes be held down by weights. Unless extremely high velocities, heavy debris, or a large amount of ice is anticipated, an effective method of weighting poly is a grid system of sandbags, as shown on ***Plate 4***. A grid system can be constructed faster and requires fewer bags and much less labor than a total covering. Grid systems may include vertical rows of lapped bags or 2x4 boards held down by attached bags.

A grid system of counterweights is more suitable for placement under wet conditions. Counterweights consisting of two or more sandbags connected by a length of quarter-inch rope are saddled over the levee crown with a bag on each slope. The number and spacing of counterweights will depend on the uniformity of the levee slope and current velocity. For the more extreme conditions mentioned previously, a solid blanket of bags over the poly should be used. Sandbag anchors can also be formed at the bottom edge of the poly by bunching the poly around a fistful of sand or rock and tying a sandbag to each fist-sized ball. This counterweight method is shown on ***Plate 5***.

If the counterweight method is used, efficient placement of the poly requires that a sufficient number of the rope and sandbag counterweights be prepared prior to the placement of each poly sheet. Placement consists of first casting out the poly sheet from the top of the levee with the bottom weights in place, and then adding counterweights to slowly sink the poly sheet into place. In most cases the poly will continue to move down slope until the bottom edge reaches the toe of the slope. Sufficient counterweights should be added quickly to ensure that no air voids exist between the poly and the levee face and to keep the poly from flapping or being carried away in the current.

For extreme conditions such as high velocity, excess seepage, ice or debris in the water or wave action, a solid blanket of bags over the poly should be used.

Poly and sandbags can be used in a variety of combinations, and time becomes the factor that may determine which combination to use. While the implementation of poly with sandbags is an effective remedy, it can be overused or misused. For example:

- On well-compacted clay embankments in areas of relatively low velocities, use of poly would be excessive, as compacted clay is unlikely to be scoured out.
- Placement of poly on landward slopes to prevent seepage must **never** be done. This will only force seepage to another exit that may prove more detrimental.
- A critical analysis of each situation should be made before poly and sandbags are used, with a view toward less waste and more efficient use of these materials and available manpower. However, if a situation is doubtful, poly should be used rather than risk a failure.

3.4.2 **Riprap**. The use of riprap is a positive means of providing slope protection and has been used in a few cases where erosive forces (caused by current, waves, or debris) were too large to effectively control by other means. Objections to using riprap when flood fighting are: (1) the relatively high cost, (2) a large amount may be necessary to protect a given area, (3) limited availability, and (4) little control over placement, particularly in the wet.

3.4.3 **Small Groins**. Groins extending 10 feet or more into the channel can be effective in deflecting current away from the levees. Groins can be constructed using sandbags, snow fence, rock, compacted earth or any other substantial materials available. Preferably, groins should be placed in the dry and at locations where severe scour may be anticipated. Consideration of the hydraulic aspects of placing groins should be given because haphazard placement may be detrimental. Hydraulic technical assistance should be sought if doubts arise in the use of groins. Construction of groins during high water will be very difficult and results will generally be minimal. If something other than compacted fill is used, some form of anchorage or bonding should be provided; generally snow fence anchored to a tree beyond the toe of levee is used, but junk car bodies can be tied together to act as anchors.

3.4.4 **Log Booms**. Log booms have been used to protect levee slopes from debris or ice attack. Logs are cabled together and anchored in the levee with a device referred to as a "dead man," often consisting of a concrete block with reinforcing bar, or another heavy anchor. The anchor should be of sufficient size and weight to hold the log boom in place. The log boom is floated out into the current and, depending on the log size, will deflect floating objects and protect the levee.

3.4.5 **Miscellaneous Measures.** Other available methods of slope protection include placement of straw bales pegged into the slope and spreading straw on the slope and overlaying with snow fencing. Both have been successful against wave action.

3.5 Flashboard and Box Levee Barriers

In addition to earth fill and sandbag levees, two additional types of flood barriers are flashboard and box levees. The construction of flashboard and box levees requires significant time and expense to complete, so they are not very practical for emergency situations unless constructed well in advance of a flood event. However, they may be suitable under certain circumstances. Both are constructed using lumber and earth fill, and they may be used for capping a levee or as a barrier in highly constricted areas. Construction details for these barriers are shown on ***Plate 6***.

3.6 Closures

Closures consist of gaps in the flood barrier system that are to be left open until flood stage reaches a critical elevation, at which point they are blocked and become part of the flood barrier. The critical elevation must be based on the time required to activate the work crew and reach the site, get materials to the site, and complete the construction, along with how fast the river is expected to rise.

Typical examples of closures include roadways and railroad tracks where traffic is allowed to continue to cross the flood barrier until the water level reaches an elevation where the risk of flooding becomes unacceptable. The size and number of closures should be kept to an absolute minimum. Although the means of blocking closures can typically be implemented fairly quickly, unanticipated problems occurring at a critical time when closure activities are underway could result in resources being reallocated elsewhere. This could result in a hole in the line of protection. If water rises faster than expected, sealing the closure can become difficult.

This page intentionally left blank

Section 4: Interior Drainage Treatment

High river stages often disrupt the normal drainage of sanitary and storm sewer systems, render sewage treatment plants inoperative, and cause untreated sewage to back up within the system into homes and businesses, and eventually directly into waterways. When the river recedes, some of the sewage and natural storm water runoff may be trapped in low-lying pockets behind the constructed levees, causing the ponded area and soils to become contaminated.

Hastily-constructed levees intended to keep out river water may also seal off normal outlet channels for local runoff, creating large ponds on the landward side of the levees. As the ponded runoff level increases, the levee now becomes vulnerable from both sides, nullifying the protection provided even if the levee is not overtopped. In these cases the ponded runoff will need to be pumped over the levee to the river side. Storm water sewers may also back up because of this ponding.

4.1 Preliminary Work

To arrive at a reasonable plan for interior drainage, field personnel must obtain several items of information:

- Size of drainage area.
- Pumping capacity and/or ponding required. This can be estimated by hydraulic engineering personnel if data are not available.
- Basic plan for treatment.
- Storm and sanitary sewer and water line maps, if available.
- Location of sewer outfalls (both abandoned and in use).
- Inventory of available local pumping facilities.
- Probable location of pumping equipment.
- Whether additional ditching is necessary to drain surface runoff to ponding and/or pump locations.
- Location of septic tanks and drain fields abandoned and in use.

4.2 Pumps: Types, Sizes and Capacities

Pumps vary in type, size, and capacity. Three common pump types are described below.

4.2.1 Crisafulli Pumps. Crisafulli pumps are normally used for pumping storm water from the dry side to the wet side of levees. Crisafulli pumps vary in size from 2-inch to 24-inches and are generally supplied with 50-foot lengths of butyl rubber hose. Care should be taken to prevent damage to the hose. Irrigation pipe or small diameter culverts can also serve as discharge piping. The outlet of a pump discharge line should extend riverward far enough off the toe of the levee so that discharges do not erode the levee slope. The discharge line will most likely need to be staked to a sheet of plywood or a tarp to prevent erosion. The discharge end should be tied down or otherwise fixed to prevent its movement. These pumps must not be operated on slopes greater than 20 degrees from horizontal. ***Table 4.1*** shows sizes and capacities (in gallons per minute, or gpm) of Crisafulli pumps.

10-foot Head			
Pump Size	gpm	Elec. HP	Gas or Diesel HP
2-inch	150	1	-
4-inch	500	7.5	15
6-inch	1,000	10	20
8-inch	3,000	15	25
12-inch	5,000	25	40
16-inch	9,500	40	65
24-inch	25,000	75	140
20-foot Head			
Pump Size	gpm	Elec. HP	Gas or Diesel HP
2-inch	130	1	-
4-inch	490	10	20
6-inch	850	15	25
8-inch	2,450	20	35
12-inch	3,750	30	50
16-inch	8,000	45	85
24-inch	19,000	100	190
30-foot Head			
Pump Size	gpm	Elec. HP	Gas or Diesel HP
2-inch	120	1	
4-inch	475	12	25
6-inch	795	20	35
8-inch	2,150	25	45
12-inch	3,450	35	70
16-inch	7,100	60	125
24-inch	16,600	125	250
NOTE: Use high head pumps for heads over 20 feet.			

Table 4.1 – Crisafulli Pumps

4.2.2 Flygt Pumps. Flygt pumps are centrifugal pumps that are normally used for pumping from manholes or storm sewers where smaller capacities are required, and are submersible. ***Table 4.2*** shows sizes and capacities of Flygt pumps.

Pump Size	Capacity*	Horsepower
3-inch	90 - 150 gpm	1.3 - 2.0 HP
4-inch	100 - 250 gpm	2.7 - 3.5 HP
6-inch	1,150 gpm	30.0 HP
8-inch	2,300 gpm	29.0 HP
10-inch	3,300 gpm	62.0 HP
* at 25-foot head		

Table 4.2 -- Flygt Centrifugal Pumps (Submersible)

4.2.3 Fire Engine Pumps. Fire engine pumps have a 4-inch suction connection and a limited pumping capacity of about 750 gpm. These pumps should only be used if absolutely necessary.

4.3 Determination of Pumping Requirements for Storm Water Runoff

For storm water runoff, the pumping rate in gallons per minute (gpm) = KAM.

- K is a constant, which can be determined from ***Table 4.3.*** The values in this table reflect relatively minor rainfalls; damages from large rainfalls are still possible.
- A is the contributing drainage area in acres.
- M is a reduction factor if one or more substantial ponding areas are available. To determine the value of M, do the following:
    - First, calculate X using the following formula: X = (PA x AD x 100) / A. PA is the pond surface area in acres at maximum allowable pond elevation, AD is the average depth of ponding area in feet, and A is the contributing drainage area in acres.
    - Once you have calculated the value for X, use ***Table 4.4*** to determine the value of M**.**

Area	"Minimum" K value*	"Desirable" K value*
Red River and Souris River Basin	25 to 30	70 to 85
Headwaters Mississippi River Basin	25 to 30	70 to 90
Minnesota River Basin	30 to 35	90 to 100
Mississippi River Basin, Little Falls to St. Croix Basin at Prescott	30 to 35	85 to 95
Mississippi River Basin, Prescott to L/D No. 10	30 to 35	95 to 100
Wisconsin and Chippewa River Basin	30 to 35	85 to 100
Lake Superior Area	25 to 30	70 to 85

* The K value varies from the smaller value for the northern part of the designated area to the larger value for the southern part of the area. The "minimum" K value in the first column is for a 1/10 year recurrence interval (10 rain events per year) varying from 0.5 to 0.7 inch in a 6-hour period. The "desirable" K value in the second column represents a 2-year recurrence interval (1 rain event per 2 years) varying from 1.5 to 2.2 inches in a 6-hour period.

Table 4.3 – Values of K for Computation of Pumping Rates

X	M
0-10	1.0
10-20	0.9
20-25	0.8
25-30	0.7
30-35	0.6
35-40	0.5
40-45	0.4
45-50	0.3
50-55	0.2
55-60	0.1
Greater than 60	0.0

Table 4.4 – Values of M for Adjustment to Pumping Rate

If a long duration flooding is expected, pumping provided should be above the minimum pumping capacities determined in this section. If the foundation is relatively pervious, a seepage allowance of 1 to 2 gpm per linear foot of levee should be added to the pumping rate determined from the above formula. If the foundation consists of a thick clay layer, seepage will be negligible.

Example: Local civil defense officials are considering the emergency construction of approximately 3,000 linear feet of levee, which will seal off the natural outlet for approximately 200 acres of local runoff from a small, non-storm-sewered city on the Minnesota River where 1965 floodwaters exceeded flood stage for 15 days. It is estimated that 20 acres of ponding area with a maximum depth of 4 feet will be available. What pumping capacities can be recommended for the removal of surface runoff and seepage through the levee?

- Assuming this city is in the northern part of the Minnesota River Basin, select K values from ***Table 4.3***.

  K minimum = 30

  K desirable = 90

- Assuming the average depth of the ponding area is 1/2 of the maximum depth:

  Average depth = 1/2 *x* 4.0 = 2.0 feet

$$X = \frac{20 \; x \; 2.0 \; x \; 100}{200} = 20.0$$

- Select M from ***Table 4.4***

  M = 0.9

- Runoff pumping rate from 200 acres:

  "Minimum" = 30 *x* 200 *x* 0.9 = 5,400 gpm

  "Desirable" = 90 *x* 200 *x* 0.9 = 16,200 gpm

- Seepage:

  3,000 linear feet *x* 1 gpm/foot = 3,000 gpm

- Total Pumping:

  "Minimum" Pumping Rate = 5,400 + 3000 = 8,400 gpm

  "Desirable" Pumping Rate = 16,200 + 3000 = 19,200 gpm

4.4 Determination of Pumping Requirements for Sewer Systems

During high water, increased infiltration into sanitary sewers may necessitate increased pumping at the sewage treatment plant or at manholes at various locations to keep the system functioning. To estimate the quantity of sewage, allow 100 gallons per capita per day for sanitary sewage and an infiltration allowance of 15,000 gallons per mile of sewer per day. In some cases, it will be necessary to pump the entire amount of sewage, and in other cases only the added infiltration will have to be pumped to keep a system in operation.

Example: Estimate pumping capacity required at an emergency pumping station to be set up at the first manhole above the sewage treatment plant for a city of 5,000 population and approximately 30 miles of sewer (estimated from map of city). In this case, it is assumed that the treatment plant will not operate at all.

Computation:

Sewage: $$\frac{5000\ persons\ x\ 100\ gal\ /\ person\ /\ day}{24\ hrs\ /\ day\ x\ 60\ minutes\ /\ hr} = 347\ gpm$$

Infiltration: $$\frac{15000\ gal\ /\ minute\ /\ day\ x\ 30\ min}{24\ hrs\ /\ day\ x\ 60\ minutes\ /\ hr} = 312\ gpm$$

Adding these two values together, the required pumping capacity is 659 gpm. If using a Flygt centrifugal pump from ***Table 4.2***, you could use one 6-inch or three 4-inch pumps.

Table 4.5 indicates the size of pump needed to handle the full flow discharge from sewer pipes up to 24 inches in diameter. ***Table 4.6*** shows sizes and capacities of agricultural type pumps that may be useful in ponding areas or in low areas adjacent to the flood barrier where a sump hole could be excavated. ***Table 4.7*** lists full flow discharge capacities for clay sewer pipes laid on slopes of 0.001 and 0.005 feet per foot. Generally, the smaller pipes are laid on steeper slopes than the larger pipes.

Sewer Pipe Diameter	Probable Required Pump Size
6-inch	2-inch
8-inch	2- to 3-inch
10-inch	3- to 4-inch
12-inch	4- to 6-inch
15-inch	6- to 8-inch
18-inch	6- to 10-inch
21-inch	8- to 10-inch
24-inch	10- to 12-inch

Table 4.5 – Matching Sewer Pipe Size to Pump Size

16-inch Regular Pump @ 540 rpm		
Total Dynamic Head (in feet)	Capacity (gpm)	Brake Horsepower
0	13,500	100
5	12,000	95
10	10,600	91
15	8,900	85
20	7,100	78
25	5,300	70
30	3,300	60
35	1,400	47
38.3	0	36.5
12-inch Regular Pump @ 540 rpm		
Total Dynamic Head (in feet)	Capacity (gpm)	Brake Horsepower
0	5,525	42
5	5,100	40
10	4,600	38
15	3,900	35
20	2,900	30
24.8	0	15.6

Table 4.6 – Pump Discharge Capacities for Ag. Pumps

	S = 0.001		S = 0.005	
Pipe Diameter	Cubic Feet per second (cfs)	Gallons per minute (gpm)	Cubic Feet per second (cfs)	Gallons per minute (gpm)
6-inch	0.19	85	0.35	156
8-inch	0.35	156	0.76	340
10-inch	0.65	292	1.6	720
12-inch	1.2	540	2.5	1,120
15-inch	2.1	945	4.5	2,020
18-inch	3.4	1,520	7.3	3,260
21-inch	5	2,230	11.2	5,000
24-inch	8.2	3,660	15.2	6,800

Table 4.7 – Flow Capacity of Clay Sewer Pipe on two different slopes (S)

4.5 Metal Culverts

Pumping of ponded water is usually preferable to draining the water through a culvert since the tail water (drainage end of culvert) could increase in elevation to a point higher than the inlet, and water could back up into the area being protected. Installation of a flap gate at the outlet end may be desirable to minimize backup.

If a culvert is desired to pass water from a creek through a levee, an engineering-based computation of the drainage basin is required to determine pipe size.

This page intentionally left blank

Section 5: Flood Fight Problems

Many issues can arise during a flood fight. The most valuable asset in problem solving under emergency conditions is capable field personnel. Many problems can be solved quickly and efficiently through the application of common sense and sensitivity to human relations. Physical problems with the levees and related infrastructure can be identified early if a well-organized levee patrol team with a good communication system exists.

The problems most critical to the integrity of the flood barrier system are described below. Current conditions must be taken in to account before implementing a specific solution, including high and low temperatures, frost depth, and the level of water on levee slopes.

5.1 Definitions

Overtopping: Overtopping occurs when water levels exceed the crest elevation of a levee and flow into protected areas. A breach may occur as a result of overtopping. In some cases, a levee may be overtopped without breaching (Non-Breach). In these cases, the water does not erode the levee structure and the levee is still functional for the next event. ***Figure 9*** illustrates overtopping results.

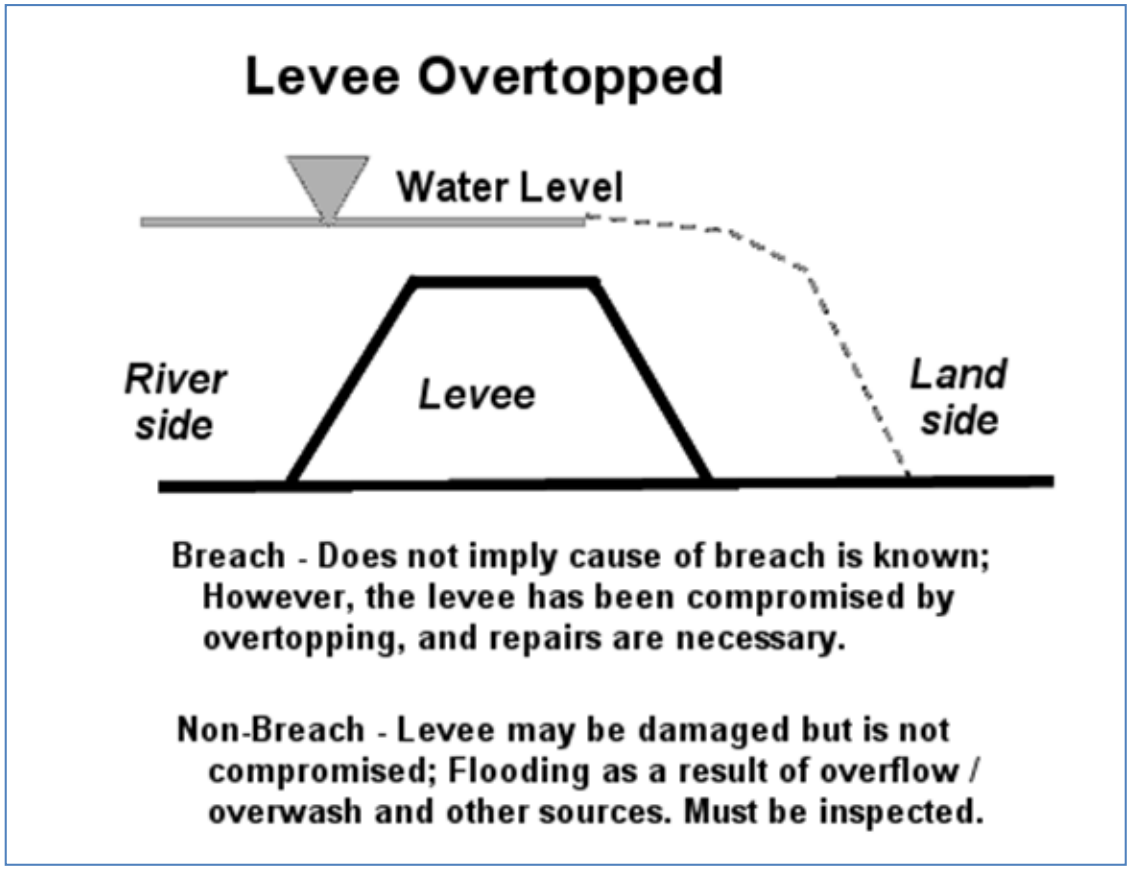

Figure 9 – Possible results when levee is overtopped.

Breach: A rupture, break, or gap in a levee system whose cause has not been determined.

Overtopping Breach: A breach whose cause is known to be a result of overtopping (system exceeded). A breach occurs during overtopping due to damages caused by the water flowing over the top of the levee. Once breached the levee must be repaired to function during the next flood event.

Failure Breach: A breach in a levee system for which a cause is known and which occurred without overtopping. A failure breach occurs due to a failure of the embankment at a level below the top of the levee. ***Figure 10*** illustrates a failure breach.

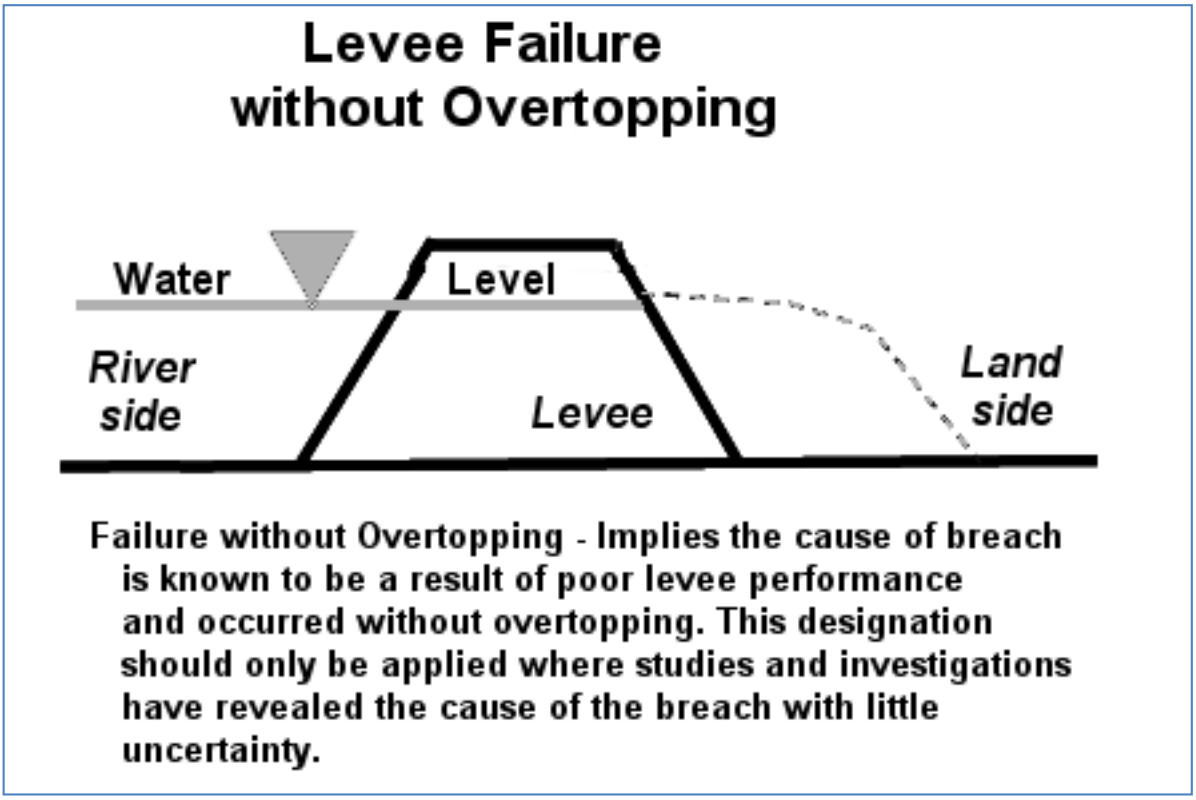

Figure 10 – Failure Breach

The chart below (***Figure 11***) further defines the appropriate flooding descriptions that correspond to the levee responses to rising water.

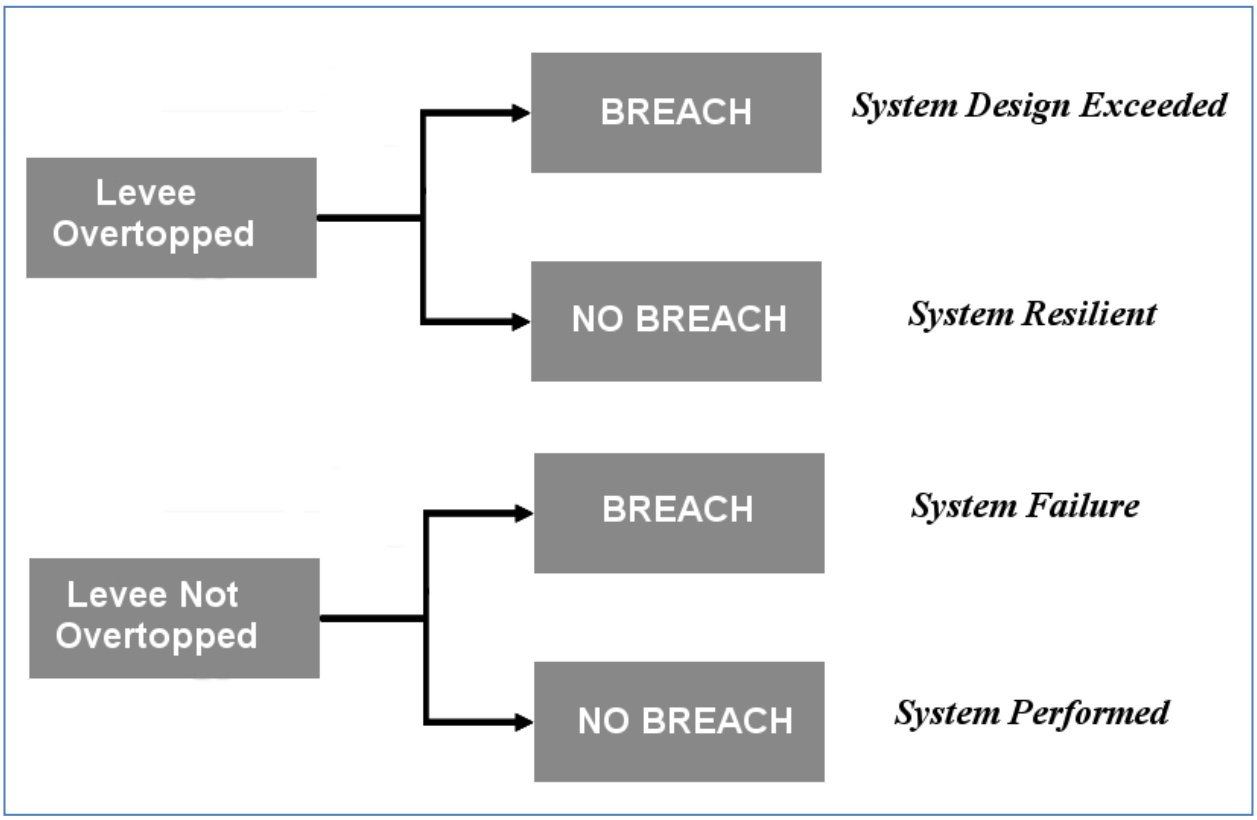

Figure 11 - Appropriate flooding descriptions corresponding to the levee responses to rising

5.2 Overtopping

Since most emergency levees are in urban areas, overtopping should be prevented at any cost. Overtopping will generally be caused by (1) unusual hydrologic phenomena that cause a much higher stage than anticipated, e.g. heavy rainfall or an ice dam in the channel, (2) insufficient time in which to complete the flood barrier, or (3) unexpected settlement or failure of the barrier.

Generally, emergency barriers are built two feet above the predicted crest level. If the crest prediction is raised during construction, additional height must be added to the barrier. On an existing or completed barrier, predictions of increases to water levels or settlement of the barrier will call for some form of capping to raise the barrier. Capping should be done with earth fill or sandbags using normal construction procedures.

5.3 Breaches

Levee breaches may occur as a result of overtopping; however there are other causes as well. Unlike overtopping, the solutions for breaches vary depending on the cause. The following subsections describe the different causes and how to prevent them.

5.4 Seepage

Seepage is percolation of water through or under a levee and generally first appears at the landside toe. Seepage through the levee is likely to occur only in a relatively pervious section. Seepage, as such, is generally not a problem unless (1) the landward levee slope becomes saturated over a large area, (2) seepage water is carrying material from the levee, or (3) pumping capacity is exceeded. Seepage that causes severe sand boils and piping is covered in the next subsection.

Seepage is almost impossible to eliminate and any attempt to do so may create a much more severe condition. Pumping of seepage should be held to a minimum, based on the maximum ponding elevation that can be tolerated without damages. In the past, attempts to keep low areas pumped dry resulted in sand boils, and additional time and effort were then expended in trying to control these sand boils caused by pumping. Therefore, seepage should be permitted if no apparent ill effects are observed and if adequate pumping capacity is available. If seepage causes saturation and sloughing of the landward slope, the section should be flattened to a 1V to 4H ratio or flatter. Material for flattening should be at least as pervious as the existing embankment material to avoid a pressure build up. Do not place clay over sand to flatten a slope.

5.5 Sand Boils

5.5.1 Definition. A sand boil is the rupture of the top foundation stratum landward of a levee caused by excess hydrostatic head in the substratum. Even when a levee is properly constructed and of such mass to resist the destructive action of flood water, water may seep through a sand or gravel stratum under the levee and break through the ground surface on the landside in the form of bubbling springs. When such a seep occurs, a stream of water bursts through the ground surface carrying with it sand or silt that is distributed around the hole in the shape of a cone. Depending on the magnitude of pressure and the size of the boil, it may eventually discharge relatively clear water or it may continue to carry quantities of sand and silt. Sand boils usually occur within 10 to 300 feet from the landside toe of the levee, but in some instances, have occurred up to 1,000 feet away.

5.5.2 Destructive Action. Sand boils can produce three distinctly different effects on a levee, depending on the condition of flow under the levee:

a. Piping Flow. Piping is the active erosion of subsurface material as a result of substratum pressure and concentration of seepage in a localized channel. The flow breaks out at the landside toe in the form of one or more large sand boils. Unless checked, this flow causes the development of a cavern under the levee, resulting in the subsidence of the levee and possible overtopping. This case can be easily recognized by the slumping of the levee crown.

b. Non Piping Flow. In this case, the water flows under pressure beneath the levee without following a defined path, as in the case above. This flow results in one or more boils outcropping at or near the landside toe. The flow from these boils tends to undercut the landside toe, resulting in sloughing of the landward slope.

c. Saturating Flow. In this case, numerous small boils, many of which are scarcely noticeable, outcrop at or near the landside toe. While no boil may appear to be dangerous by itself, the group of boils may cause saturation and flotation ("quickness") of the soil. This can reduce the shear strength of the material at the levee toe to such an extent that failure of the slope through sliding may result.

5.5.3 Combating Sand Boils. All sand boils should be watched closely, especially those within 100 feet of the toe of the levee. All boils should be conspicuously marked with flagging so that patrols can locate them without difficulty and observe changes in their condition. A sand boil that discharges clear water in a steady flow is usually not dangerous to the safety of the levee. However, if the flow of water increases and the sand boil begins to discharge material, corrective action should be undertaken immediately.

The accepted method of treating sand boils is to construct a ring of sandbags around the boil, building up a head of water within the ring sufficient to check the velocity of flow, thereby preventing further movement of sand and silt. ***Plate 10*** illustrates and describes the techniques for

ringing a boil with sandbags. Actual conditions at each sand boil will determine the exact dimensions of the boil and the flow of water from it, and the required sandbag ring.

In general, the following considerations should control construction of the sandbag ring: (1) the base width of the sandbag section on each side of the ring should be no less than 1-1/2 times the contemplated height, (2) weak soils near the boil should be included within the ring, thereby preventing a break through later, and (3) the ring should be sufficient size to permit sacking operations to keep ahead of the flow of water. The height of the ring should only be high enough to stop the movement of soil in the water, and not so high as to completely eliminate seepage. The practice of raising the ring to the river elevation is not necessary and may be dangerous in high stages.

If seepage flow is completely stopped, a new boil will likely develop beyond the ring. This boil could erupt suddenly and cause considerable damage. Where many boils are found to exist in a given area, a ring levee of sandbags should be constructed around the entire area, and, if necessary, water should be pumped into the area to provide sufficient weight to counterbalance the upward pressure.

In the case of smaller sand boils, large diameter metal or concrete pipe can be placed around the boil to reduce the flow of soil material from the boil. In such cases, take care not to stop the water flow from the boil, only the material flow. It may be necessary to cut a hole in the side of the pipe to allow water to exit.

5.6 Erosion

Erosion of the riverside slope is one of the most severe problems that will be encountered during a flood fight. Emergency operations to control erosion include the use of polyethylene sheeting and sandbag anchors. Poly placement along the riverward face of the levee is discussed at length in Section 3.4, Erosion Protection for Emergency Levees.

5.7 Sewer-Related Problems

During a flood fight, continued surveillance of possible sewer problems is necessary. Existing sewers in the protected area may cause problems because of seepage into the lines, leakage through blocked outlets to the river, insufficient manhole pumps, or old or abandoned sewer locations that were not known during pre-flood preparations. Any of these conditions can cause high pressures in parts of the sewer system and lead to backflow, collapse of the lines at weak points, and manhole covers blowing off.

Watertight sluice gates, or flap gates can be used to prevent backflow. Emergency stoppers may be constructed of lumber, sandbags, or other materials, using poly as a seal, preferably placed on the discharge end of the outfall pipe. ***Plate 7*** shows examples of prefabricated pipe stoppers that can be placed in the pipe to block flows. ***Plates 8 and 9*** illustrate methods of sealing off the outlet openings of a manhole with standard materials that are normally available so that the manhole may be used as an emergency pumping station.

If the water level in a manhole approaches the top, additional pumps in other manholes may alleviate the problem. In sanitary sewers, additional pumping may be required at various locations in the system to provide continued service to the homes in the protected area. When pumps are not available, manholes may have to be ringed with sandbags or contained by some other method, such as concrete culverts with a sandbag base that allows the water to rise up above the top of the manhole. Some leakage may occur that will require safe disposal.

To eliminate the problem of disposing of this leakage from manholes, the ring levee would have to be raised above the river water surface elevation. Doing so creates high pressures on the sewer and should not be done. As with sand boils, it is best to ring the manhole part way to reduce the head and dispose of any leakage that occurs.

Directly weighing down manhole covers with sandbags or other items is not recommended where high heads are possible as this will not work. A 10-foot head on a manhole cover 2 feet in diameter would exert a force of 2,060 pounds. Thus, a counterweight of more than one ton would have to be placed directly on the cover.

5.8 Other Causes of Levee Failure

In addition to the problems covered above, the following conditions could contribute to failure:

- Joining of an earth levee to a solid wall, such as concrete or piling.
- Structures projecting from the riverside of levee.
- A utility line crossing or a drain pipe crossing through the levee fill.
- The elevation of the tops of “stoplogs” on roads or railroad tracks are at a lower elevation than the top of the levee.
- Relying on railroad embankments as levees. Material comprising a railroad embankment may not be suitable as levee fill. Furthermore, the railroad embankment section often has a narrow top width and steep side slopes.
- Allowing pump discharge lines to discharge directly on the riverward levee slope. When discharge lines are allowed to discharge on the levee slope, severe erosion can occur, thus threatening the levee stability. Insure that outlets for pump discharge lines are placed riverward beyond the levee toe, and appropriately anchored to prevent movement.

5.9 Interior Flooding

Even when the levee performs as designed (***Figure 12***), interior flooding can occur. Some of the causes of interior flooding are:

- Seepage
- Sand Boils
- Rainfall Runoff
- Levee Penetrations – drainage conduits designed to drain the interior area during low flows do not close properly during the flood event and allow water to flow from the river side to the interior side.
- Pump Station Failures – pump stations designed to pump interior drainage over the levee can fail during an event due to pump failures loss of power.

Solutions for interior flooding are described in Section 4, Interior Drainage.

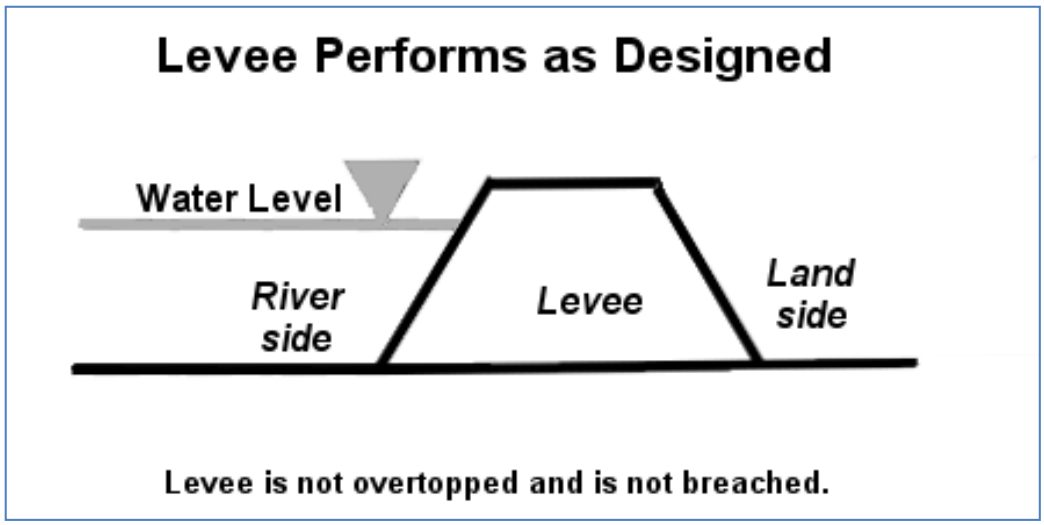

Figure 12 – Levee performs as designed.

This page intentionally left blank

Section 6: List of Resources and Hyperlinks

U.S. Army Corps of Engineers, St. Paul District:
http://www.mvp.usace.army.mil/Missions/EmergencyManagement.aspx

Community Emergency Action Plan Guidebook:
http://www.mvp.usace.army.mil/Missions/CivilWorks/FloodRiskManagement/EmergencyActionPlanGuidebook.aspx

NDSU Flood Resources: https://www.ag.ndsu.edu/flood/

Flood Response Training for Community Emergency Response Teams (CERTs):

https://www.fema.gov/media-library/assets/documents/28668

Red Cross Flood Information: http://www.redcross.org/prepare/disaster/flood

Family and Business Preparedness: http://www.ready.gov/

NOTES

Section 7: Plates Showing Emergency Flood Control Activities

PLATE 1: Recommended Method for Sandbag Levee Construction

PLATE 2: Recommended Methods for Anchoring Polyethylene Sheeting at the Levee Toe

PLATE 3: Alternate Method for Anchoring Polyethylene Sheeting at the Levee Toe (when placed in the dry)

PLATE 4: Recommended Method for Placement of Polyethylene Sheeting on Temporary Levees (when placed in the dry)

PLATE 5: Recommended Method for Placement of Polyethylene Sheeting on Temporary Levees (when placed in the wet)

PLATE 6: Recommended Method for Flashboard and Box Levees

PLATE 7: Recommended Method for Plugging Pipes

PLATE 8: Recommended Method for Adapting Manhole for Pumping, Method 1

PLATE 9: Recommended Method for Adapting Manhole for Pumping, Method 2

PLATE 10: Recommended Method for Ringing Sand Boils

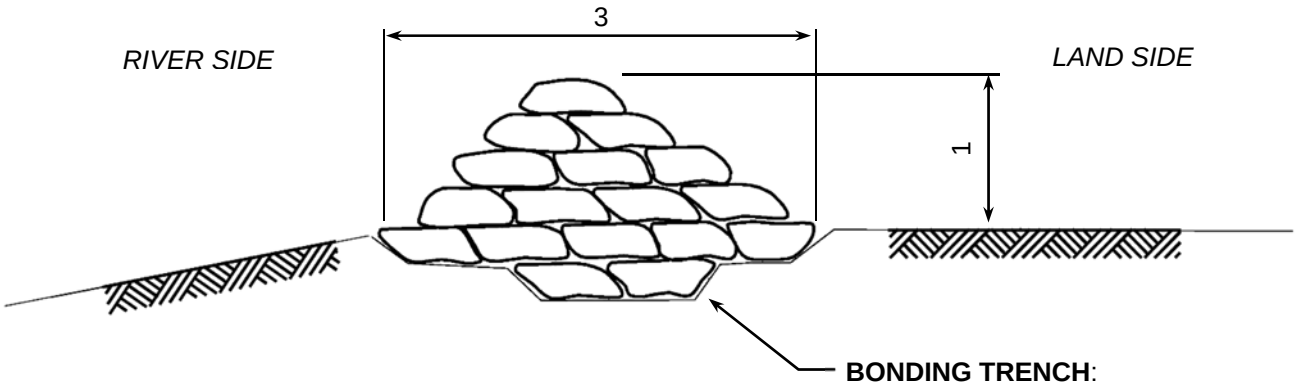

LEVEE SECTION

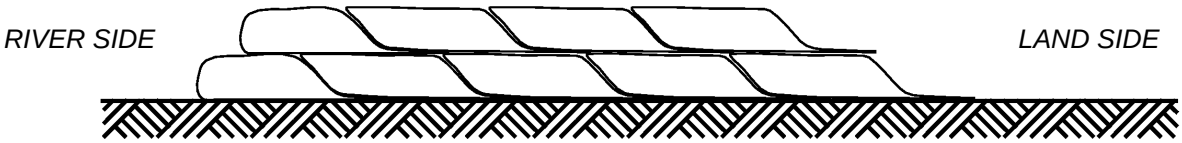

METHOD OF LAPPING SACKS

LEVEE HEIGHT	NUMBER OF SAND BAGS REQUIRED FOR LENGTH OF LEVEE									
	50 FT	100 FT	175 FT	200 FT	250 FT	300 FT	350 FT	400 FT	450 FT	500 FT
1 Foot	300	600	1,050	1,200	1,500	1,800	2,100	2,400	2,700	3,000
2 Feet	1,050	2,100	3,675	4,200	5,250	6,300	7,350	8,400	9,450	10,500
3 Feet	2,250	4,500	7,875	9,000	11,250	13,500	15,750	18,000	20,250	22,500
4 Feet	3,900	7,800	13,650	15,600	19,500	23,400	27,300	31,200	35,100	39,000
5 Feet	6,000	12,000	21,000	24,000	30,000	36,000	42,000	48,000	54,000	60,000

NOTES:

1. START UPSTREAM.
2. STRIP SOD BEFORE LAYING.
3. ALTERNATE DIRECTION OF SACKS WITH BOTTOM LAYER PARALLEL TO FLOW.
4. NEXT LAYER PERPENDICULAR TO FLOW WITH OPEN END AWAY FROM WET SIDE
5. LAP UNFILLED PORTION UNDER NEXT SACK.
6. TYING OR SEWING SACKS NOT NECESSARY.
7. TAMP THOROUGHLY IN PLACE, SACKS SHOULD BE APPROXIMATELY ½-FULL OF SAND.

US Army Corps of Engineers®
St. Paul District

PLATE 1

RECOMMENDED METHOD FOR SANDBAG LEVEE CONSTRUCTION

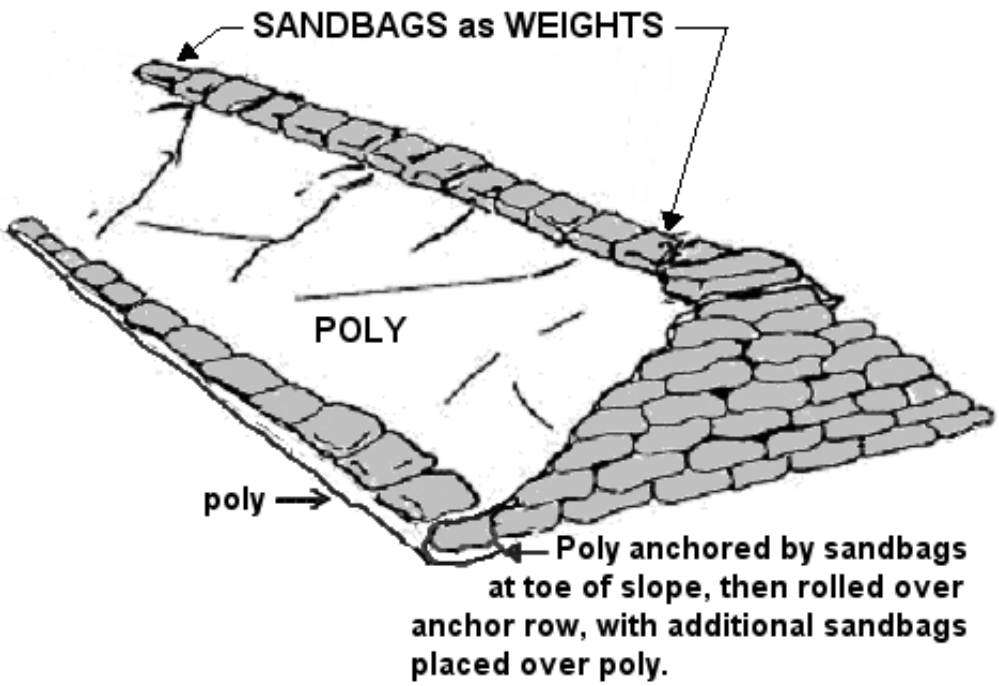

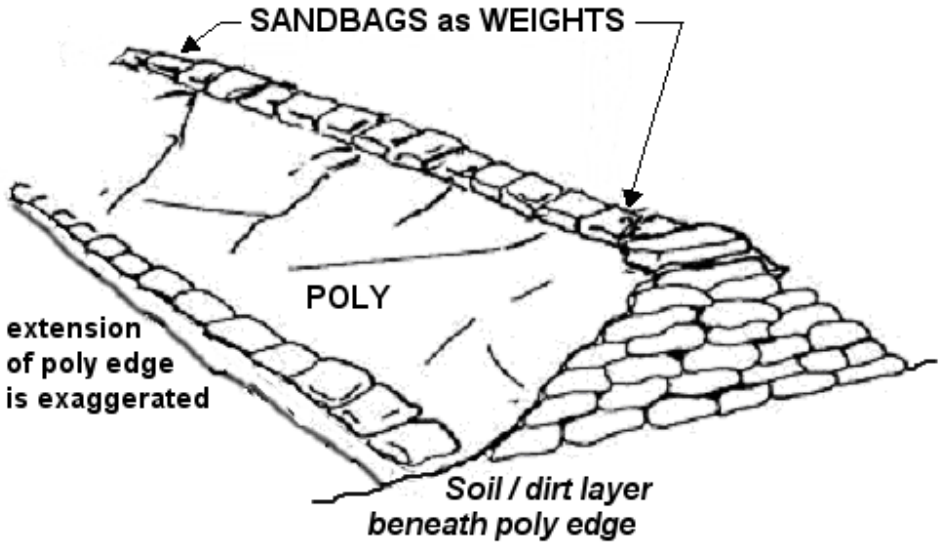

US Army Corps of Engineers®
St. Paul District

PLATE 2

RECOMMENDED METHODS FOR ANCHORING POLYETHYLENE SHEETING AT THE LEVEE TOE

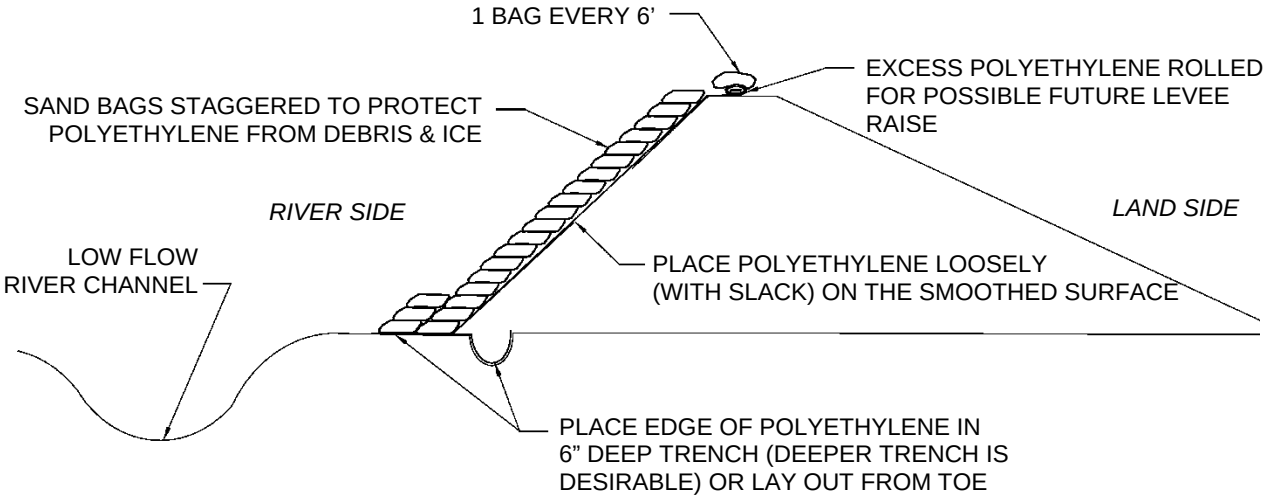

US Army Corps of Engineers®
St. Paul District

PLATE 3

ALTERNATE METHOD FOR ANCHORING POLYETHYLENE SHEETING AT THE LEVEE TOE (WHEN PLACED IN THE DRY)

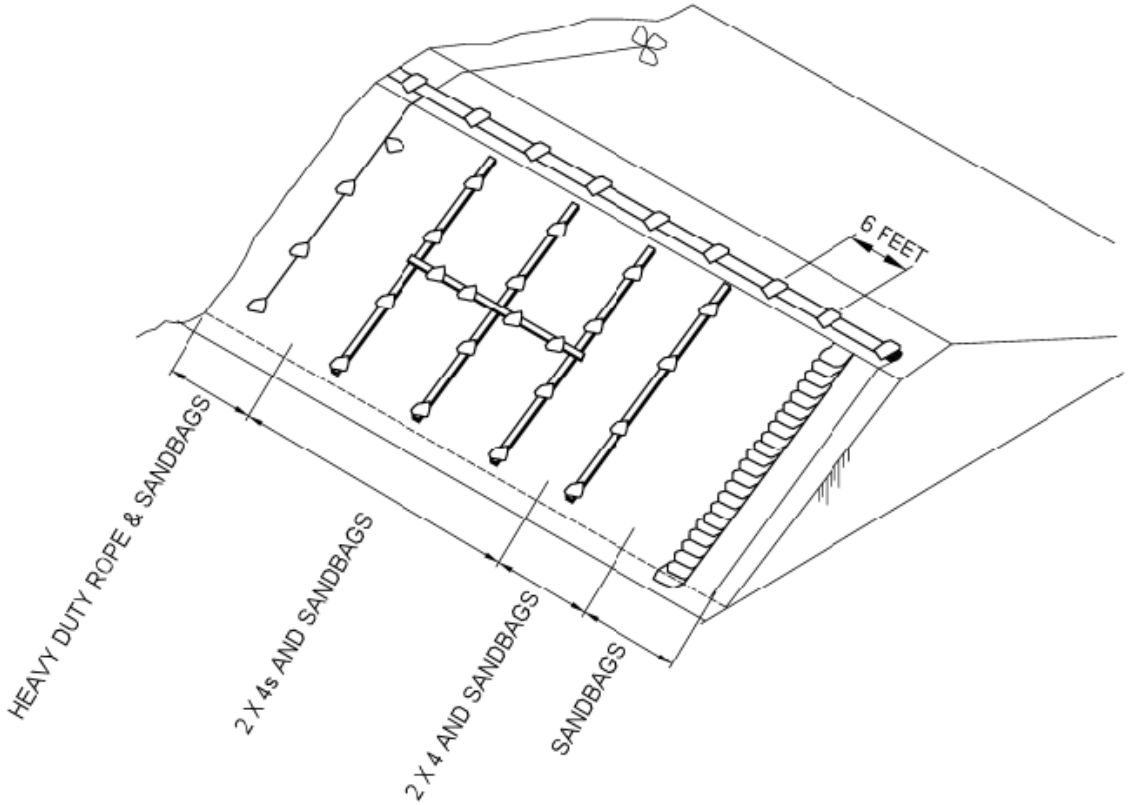

RECOMMENDED POLYETHYLENE

1st	-	6 MIL BLACK
2nd	-	6 MIL CLEAR
3rd	-	4 MIL BLACK
4th	-	4 MIL CLEAR
5th	-	2 MIL BLACK OR CLEAR (USE AS A LAST RESORT)

US Army Corps of Engineers®
St. Paul District

PLATE 4

RECOMMENDED METHOD FOR PLACEMENT OF POLYETHYLENE SHEETING ON TEMPORARY LEVEES

(WHEN PLACED IN THE DRY)

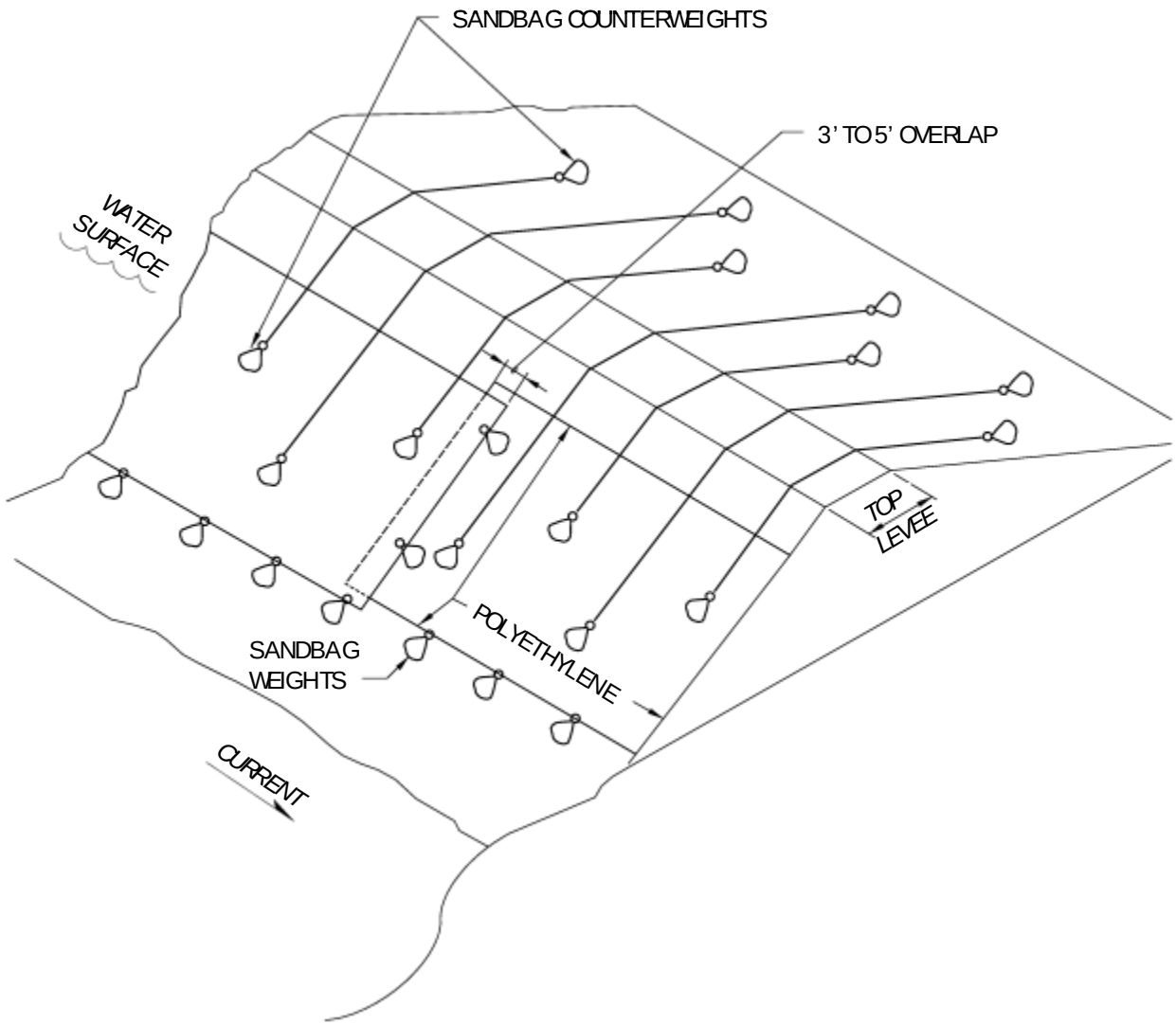

US Army Corps of Engineers®
St. Paul District

PLATE 5

RECOMMENDED METHOD FOR PLACEMENT OF POLYETHYLENE SHEETING ON TEMPORARY LEVEES

(WHEN PLACED IN THE WET)

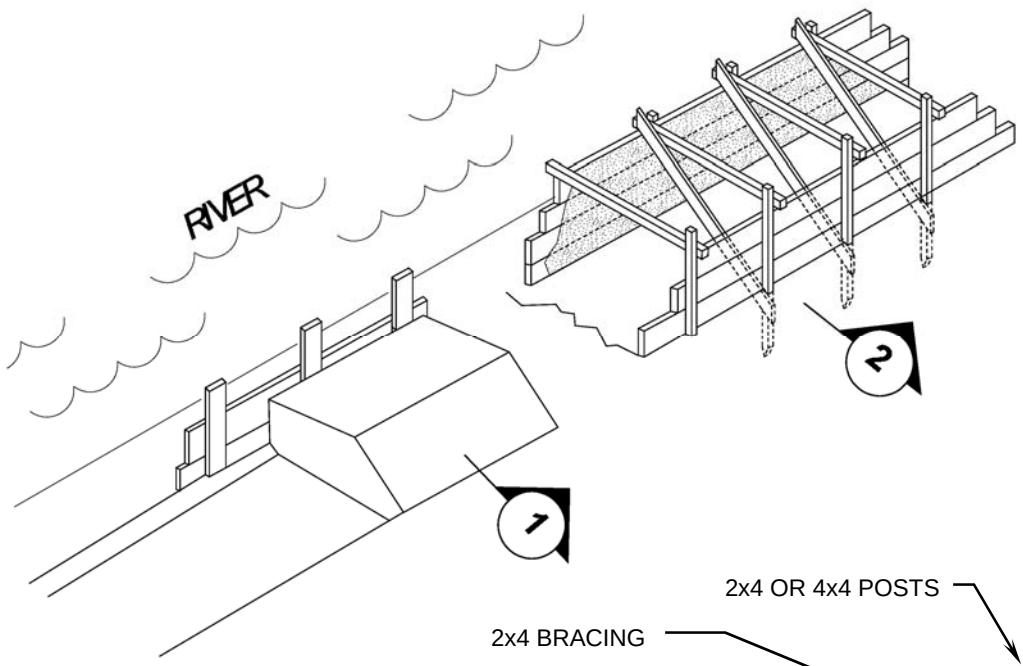

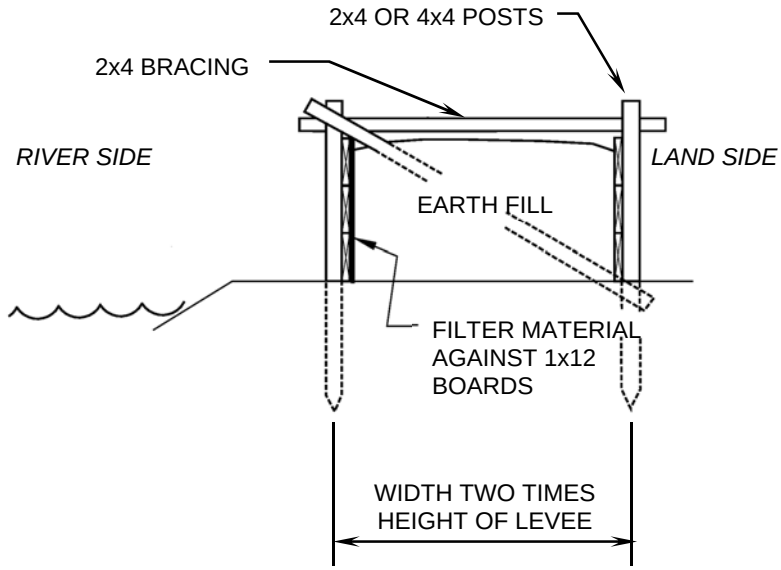

BOX LEVEE

2

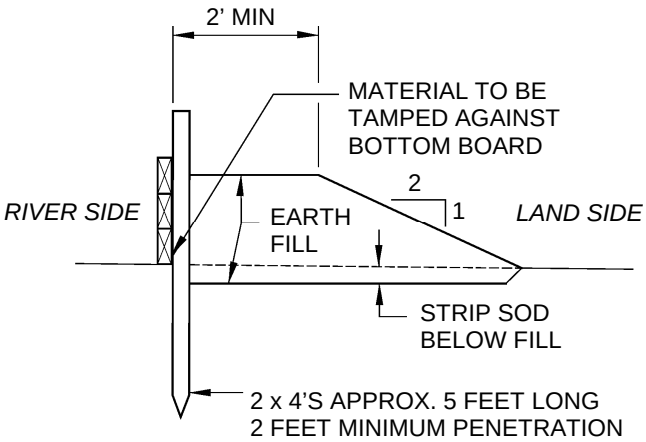

FLASHBOARD LEVEE

1

US Army Corps of Engineers®
St. Paul District

PLATE 6

RECOMMENDED METHOD FOR FLASHBOARD AND BOX LEVEES

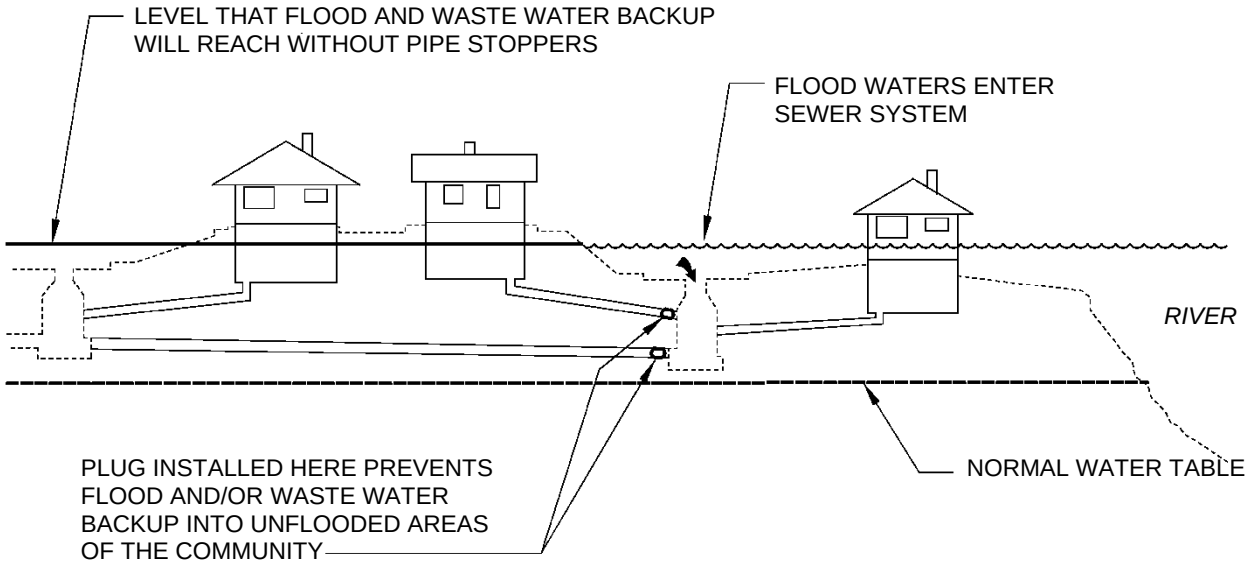

PIPE STOPPER: DESIGN 1

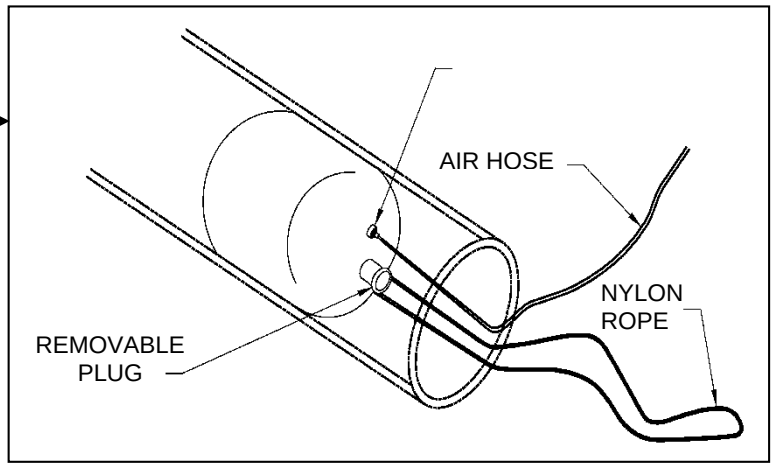

PIPE STOPPER: DESIGN 2

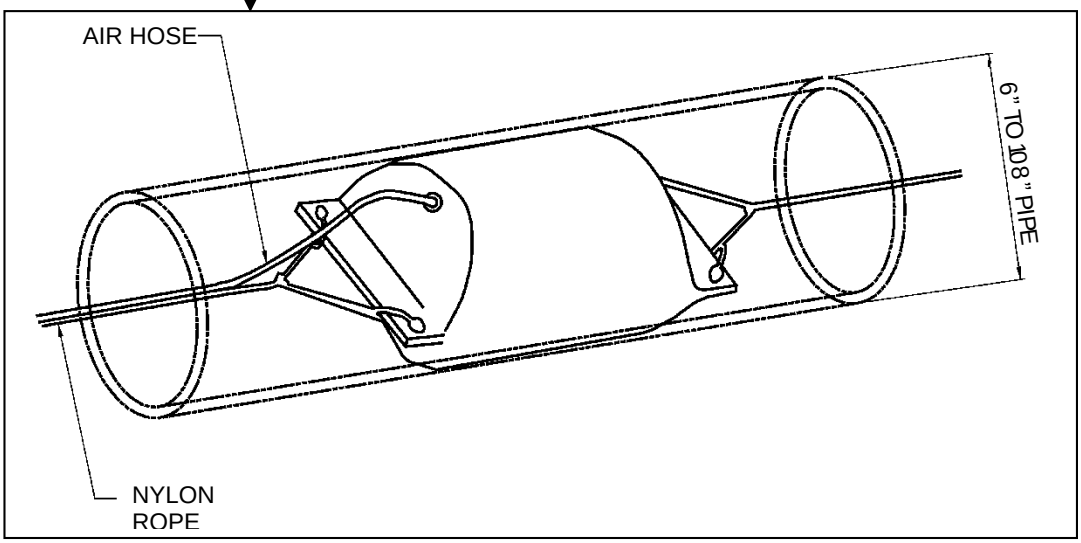

US Army Corps of Engineers®
St. Paul District

PLATE 7

RECOMMENDED METHOD FOR PLUGGING PIPES

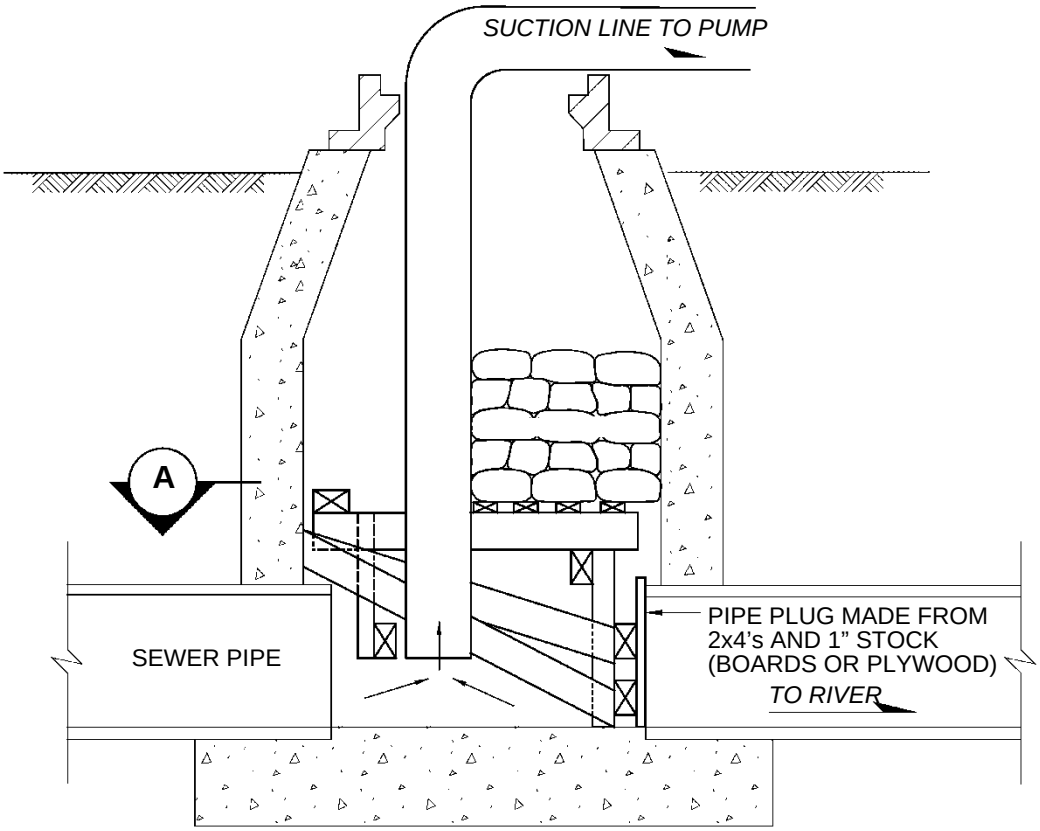

ADAPTING MANHOLE FOR PUMPING DURING FLOOD EMERGENCY

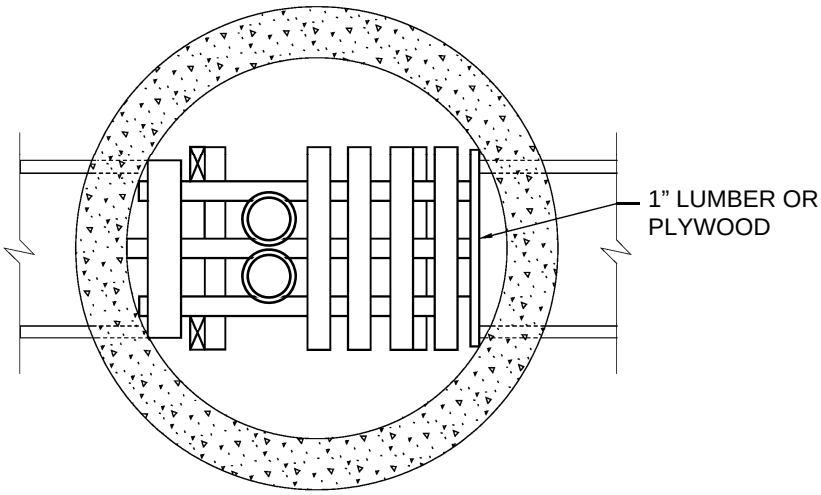

SECTION A

US Army Corps of Engineers®
St. Paul District

PLATE 8

RECOMMENDED METHOD FOR ADAPTING MANHOLE FOR PUMPING

(METHOD 1)

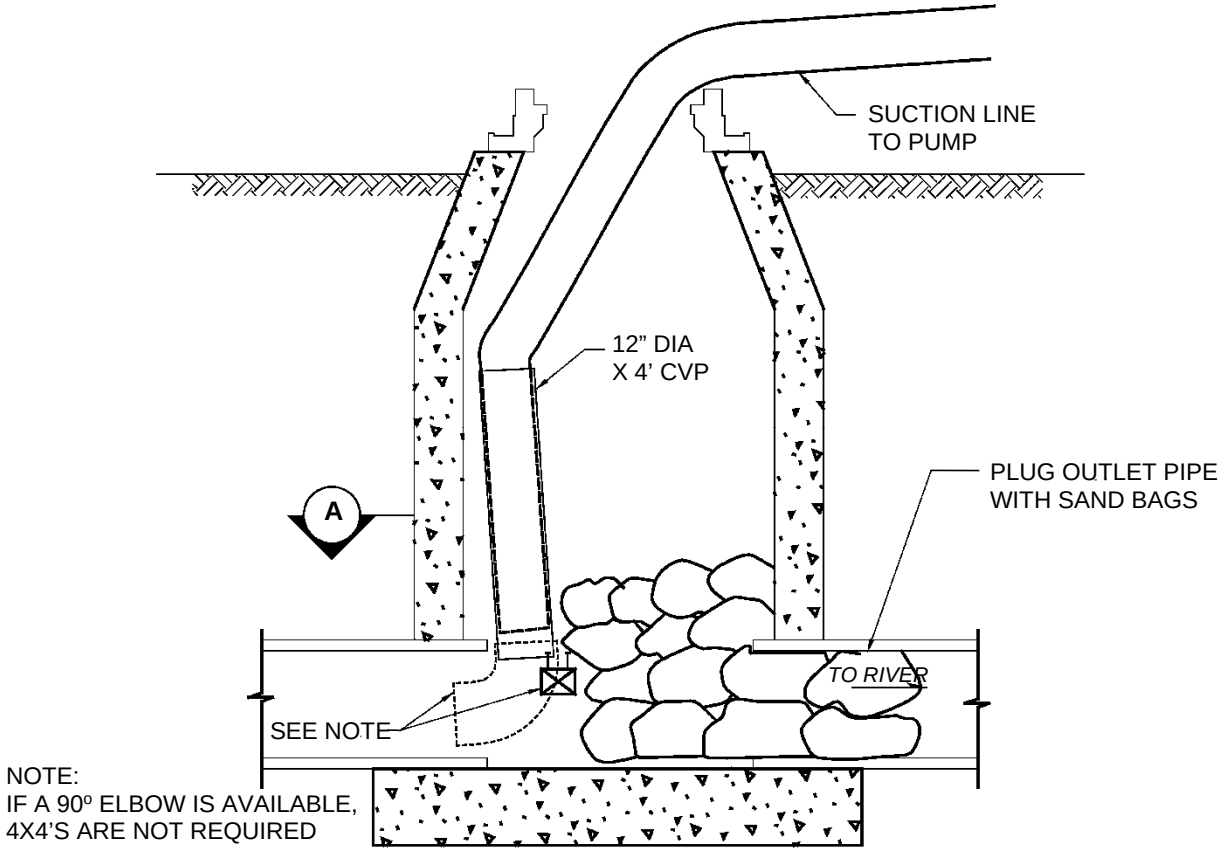

ADAPTING MANHOLE FOR PUMPING DURING FLOOD EMERGENCY

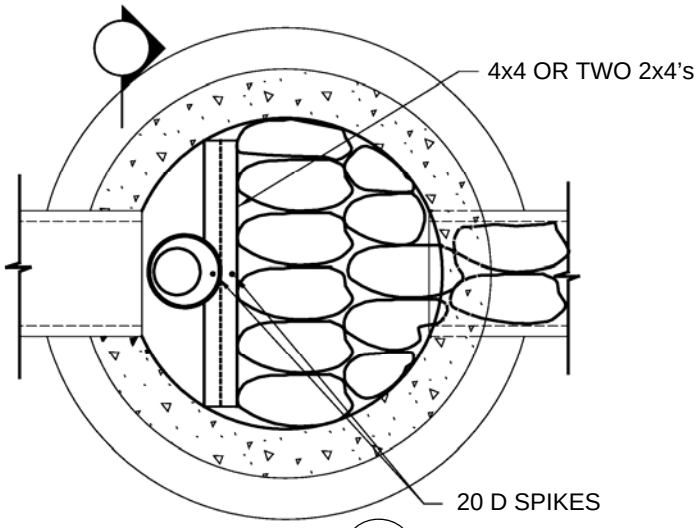

SECTION A

US Army Corps of Engineers®
St. Paul District

PLATE 9

RECOMMENDED METHOD FOR ADAPTING MANHOLE FOR PUMPING

(METHOD 2)

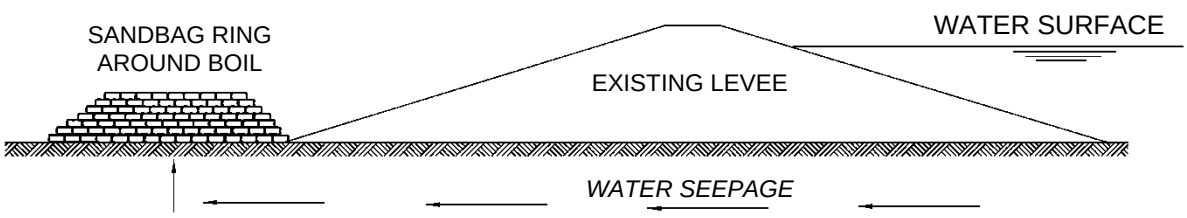

ELEVATION

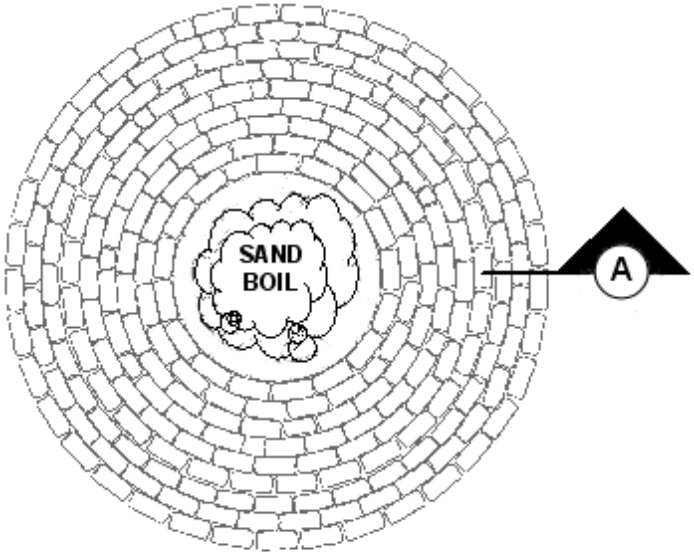

PLAN VIEW

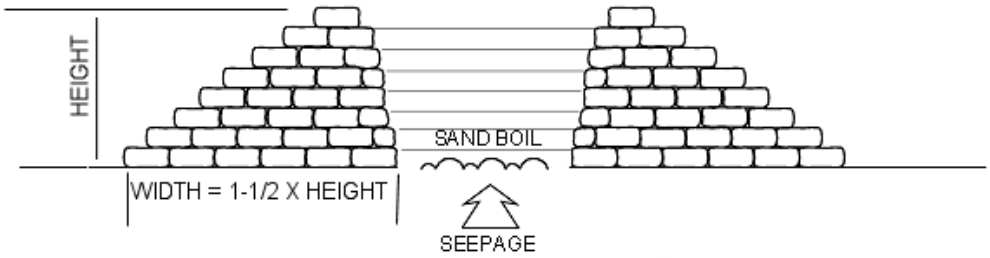

SECTIONAL ELEVATION — A

NOTES:

1. BOTTOM WIDTH TO BE NO LESS THAN 1-1/2 TIMES THE HEIGHT. TIE INTO LEVEE IF BOIL IS NEAR TOE.
2. ENTIRE BASE TO BE CLEARED AND SCARIFIED.
3. LOOSE EARTH TO BE USED BETWEEN ALL SACKS.
4. ALL JOINTS TO BE STAGGERED.

US Army Corps of Engineers®
St. Paul District

PLATE 10

RECOMMENDED METHOD FOR RINGING SAND BOILS